SUNSET ISLANDS 3 &4

FPL UNDERGROUNDING DESIGN PLANS AND SPECIFICATION

☐ INACCESSIBLE ☒ 15KV ☐ FUTURE 25KV ☐ 23KV ☒ SALT SPRAY ☐ NULL

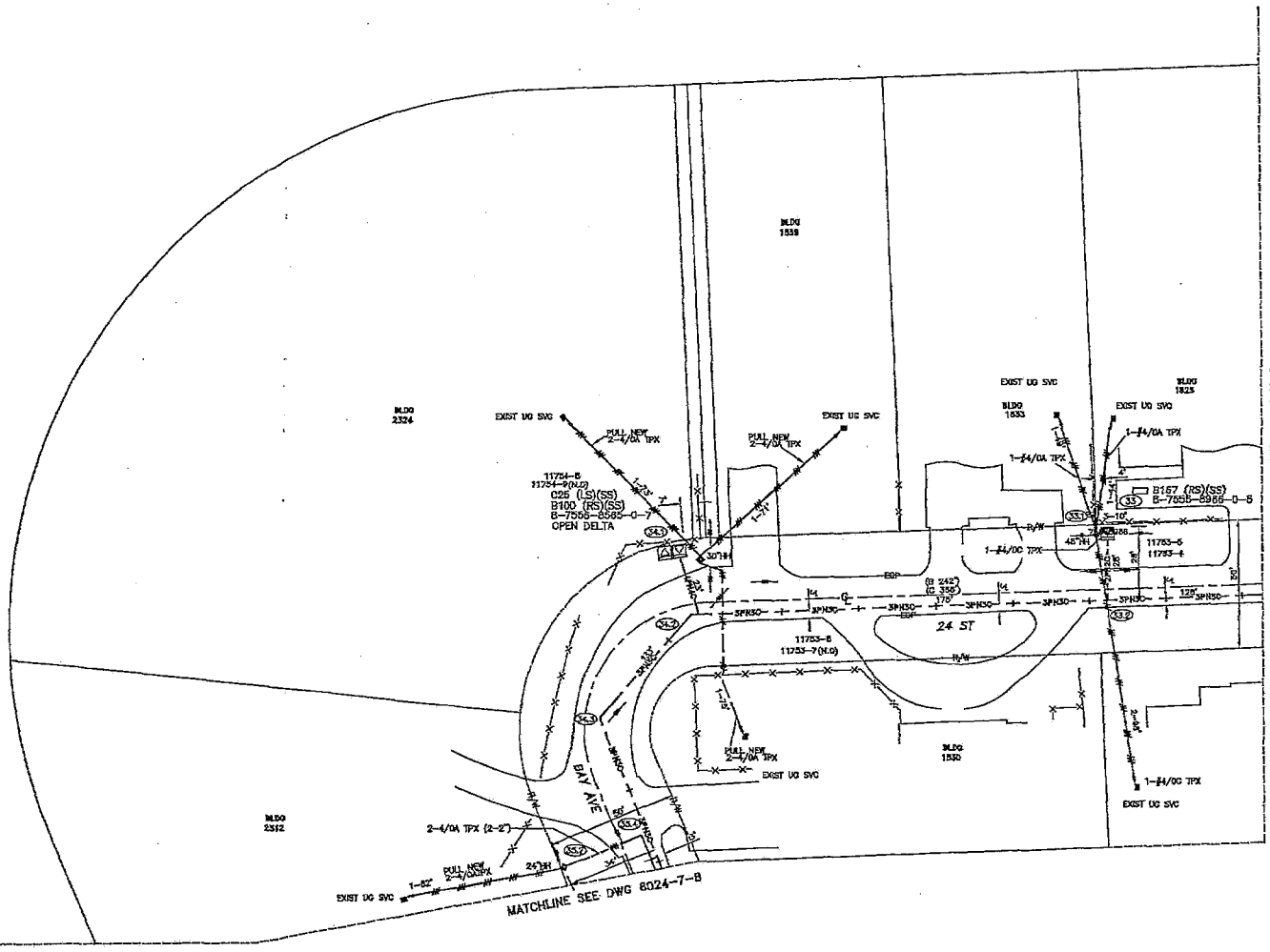

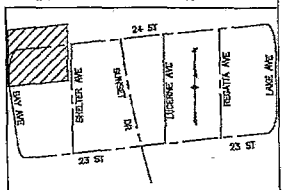

LOCATION SKETCH

N.T.S.

The location and existence of any facilities may not be relied upon by the supplier in responding to a bid or in complying with any contract. Supplier is responsible for evaluating site conditions both above and below ground including underground facility locations.

Ground Rod Information		
Location	Feet of Ground Rod Installed	Resistance (Ohms)

ATTENTION

ROW AGREEMENT

CONSTRUCTION NOTES – WR# 3085435

REQUIRED DRAWINGS
6024-7-1
6024-7-2
6024-7-3
6024-7-4
6024-7-5
6024-7-6
6024-7-7
6024-7-8
JS3085435-1(NOTES)

UTILITY CONTACT LIST
CALL SUNSHINE 1-800-432-4770

REFERENCE DWG's

6024-7-2
6024-7-8
6024-8-1(SCH)

TEMP:63 ENG:42 SEC:38 CTR:0

ASBUILT	AUTH NO.	NO.	DATE	REVISION
	3085435	0	04/16/12	OH TO UG CONVERSION INSTALL VISTA CABINET 3 & 4 AT SUNSET ISLAND 3

AS-BUILT COPY | AS-BUILT CREW PRINT

Job CERTIFIED COMPLETED as shown on this AS-BUILT print. Material changes shown on ROS.

All required ground rods have been driven & verified to be within FPL standards. Values are shown at all locations.

Easement? YES ☐ NO ☒ | Survey/Stake? YES ☒ NO ☐ | Work with SMO? YES ☐ NO ☐
Tree Work? YES ☐ NO ☒ | Designer/Stake? YES ☐ NO ☐ | CT/Special Mtr? YES ☐ NO ☐
Map Posting? YES ☒ NO ☐ | Trench Feet | Duct Bank Feet
Posted by | PERMIT REQ'D: CITY X, DR. DIST., COUNTY AIR, STATE RD, FAA, WMD, RR XING, COUNTY RD., TRANSM.
Telephone Request? YES ☒ NO ☐ | CATV Request? YES ☒ NO ☐

FPL

DESIGNED BY	M. RUIZ
DRAWN BY	R. SEEMANINE/M.R.
DATE	04/15/12
MAP NO.	V-0255

0 10 20 40 FEET

M/R CO
62E-OH/UG CONVERSION
SUNSET ISLAND 3
V/O SUNSET DR AND 23 ST
MIAMI BEACH, FL

DWG NO. 6024-7-1
WR# 3085435 WR# D030-85-435

PLOT DATE: 8/20/2015 PLOT TIME: 3:06:25 PM CAD NAME: JAT

☐ INACCESSIBLE ☒ 13KV ☐ FUTURE 23KV ☐ 23KV ☒ SALT SPRAY ☐ NULL

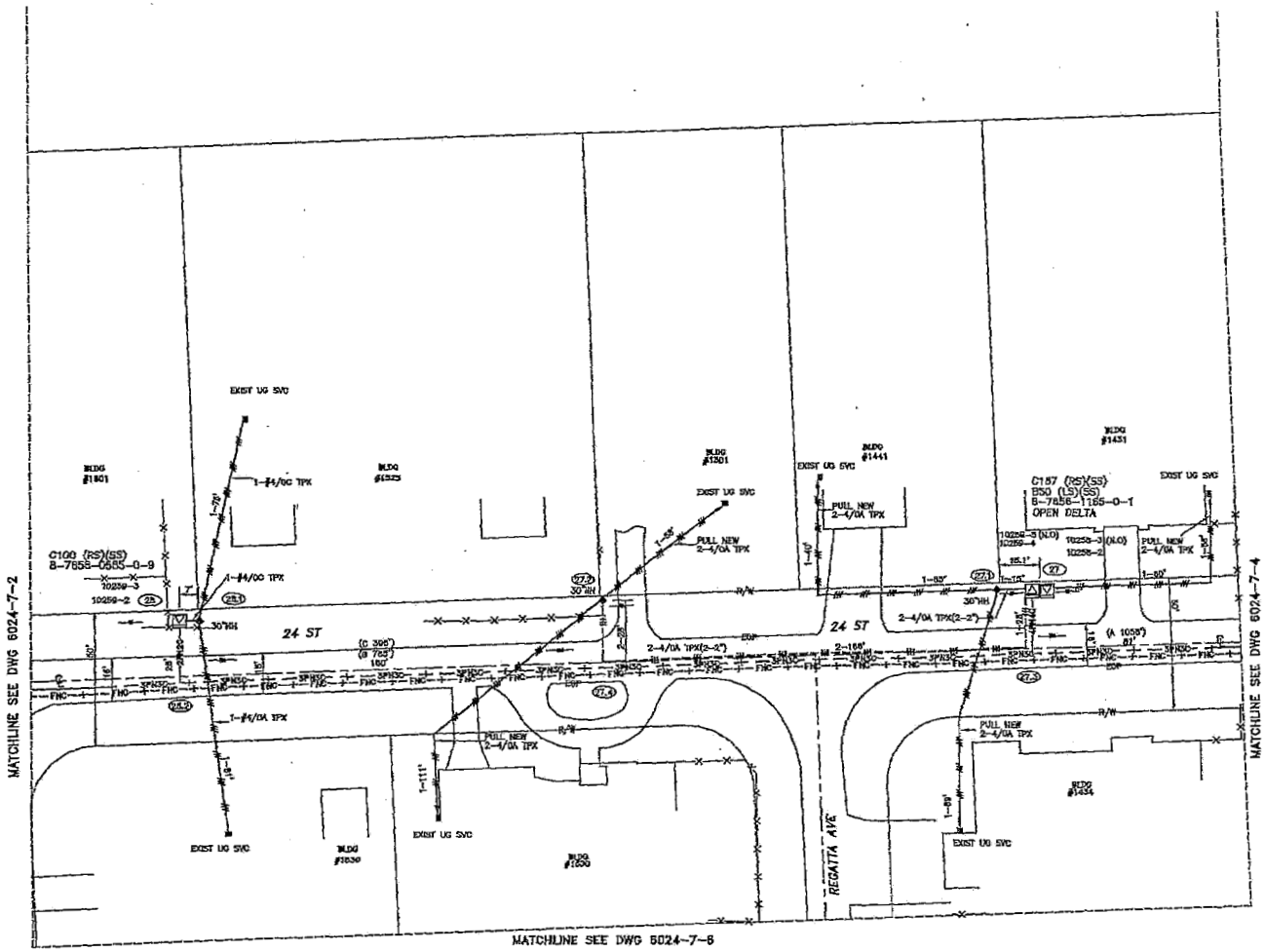

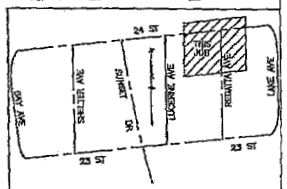

LOCATION SKETCH
N.T.S.

The location and existence of any facilities may not be relied upon by the supplier in responding to a bid or in complying with any contract. Supplier is responsible for evaluating site conditions both above and below ground including underground facility locations.

Ground Rod Information		
Location	Feet of Ground Rod Installed	Resistance (Ohms)

CONSTRUCTION NOTES – WR# 3085435

REQUIRED DRAWINGS
6024-7-1
6024-7-2
6024-7-3
6024-7-4
6024-7-5
6024-7-6
6024-7-7
6024-7-8
JS3085435-1(NOTES)

UTILITY CONTACT LIST
CALL SUNSHINE 1-800-432-4770

ATTENTION
ROW AGREEMENT

REFERENCE DWG's

6024-7-4
6024-7-5
6024-7-2
6024-8-2(SCH)

ASBUILT	AUTH NO.	NO.	DATE	REVISION
	3085435	0	04/16/12	OH TO UG CONVERSION INSTALL VISTA CABINET 3 & 4 AT SUNSET ISLAND 3

AS-BUILT COPY | AS-BUILT CREW PRINT
Job CERTIFIED COMPLETED as shown on this AS-BUILT print. Material changes shown on RDS.
All required ground rods have been driven & verified to be within FPL standards. Values are shown at all locations.

Easement? YES ☐ NO ☒ | Survey/Stake? YES ☒ NO ☐ | Work with SMO? YES ☐ NO ☐
Tree Work? YES ☐ NO ☒ | Designer/Stake? YES ☐ NO ☐ | CT/Special Mtr? YES ☐ NO ☐
Map Posting? YES ☒ NO ☐ | Trench Feet | Duct Bank Feet
Posted by | CITY X | DR. DIST. | COUNTY AIR | STATE RD | FAA | WMD | RR XING | COUNTY RD. | TRANSM.
Telephone Request? YES ☒ NO ☐ | CATV Request? YES ☒ NO ☐

FPL

DESIGNED BY	M. RUIZ
DRAWN BY	R. SEENARINE/M.R.
DATE	04/16/12
MAP NO.	V-0255

0 10 20 40 FEET

N/A CD
62E-OH/UG CONVERSION
SUNSET ISLAND 3
V/O SUNSET DR AND 23 ST
MIAMI BEACH, FL

DWG NO. 6024-7-3
WR# 3085435 MAP# D030-85-435

PLOT DATE: 7/21/2015 PLOT TIME: 10:10:50 AM CAD NAME: BNB

☐ INACCESSIBLE ☒ 13KV ☐ FUTURE 23KV ☐ 23KV ☒ SALT SPRAY ☐ NULL

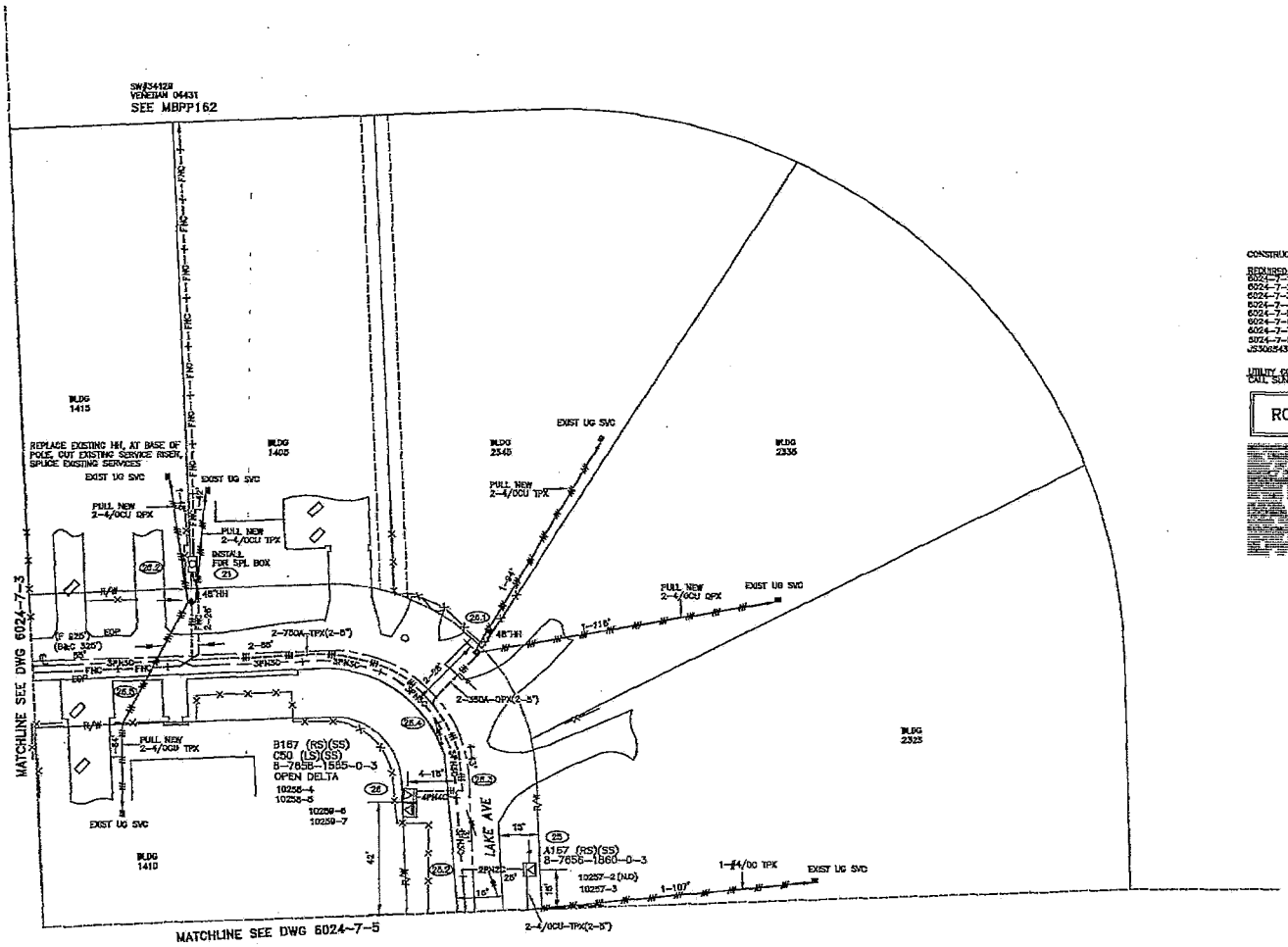

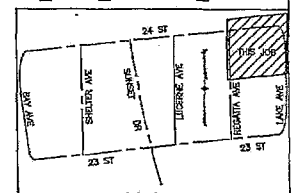

LOCATION SKETCH
N.T.S.

CONSTRUCTION NOTES – WR# 3085435

REQUIRED DRAWINGS
6024-7-1
6024-7-2
6024-7-3
6024-7-4
6024-7-5
6024-7-6
6024-7-7
6024-7-8
JS3085435-1(NOTES)

UTILITY CONTACT LIST
CALL SUNSHINE 1-800-432-4770

ATTENTION
ROW AGREEMENT

The location and existence of any facilities may not be relied upon by the supplier in responding to a bid or in complying with any contract. Supplier is responsible for evaluating site conditions both above and below ground including underground facility locations.

Ground Rod Information		
Location	Feet of Ground Rod Installed	Resistance (Ohms)

REFERENCE DWG's

6024-7-3
6024-7-5
MBPP162
6024-8-2(SCH)

TWNP: 53 RNG: 42 SEC: 28 CTR: 0

ASBUILT	AUTH NO.	NO.	DATE	REVISION
	3085435	D	04/15/12	OH TO UG CONVERSION INSTALL VISTA CABINET 3 & 4 AT SUNSET ISLAND 3

AS-BUILT COPY | AS-BUILT CREW PRINT
Initials | Carl Date | Foreman's Signature | Date
Job CERTIFIED COMPLETED as shown on this AS-BUILT print. Material changes shown on ROS.
Supervisor's Signature | Date
All required ground rods have been driven & verified to be within FPL Standards. Values are shown at all locations.
Foreman's Signature | Date

Easement? YES ☐ NO ☒ | Survey/Stake? YES ☒ NO ☐ | Work with SMO? YES ☐ NO ☐
Tree Work? YES ☐ NO ☒ | Designer/Stake? YES ☐ NO ☐ | CT/Special Mtr? YES ☐ NO ☐
Map Posting? YES ☒ NO ☐ | Trench Feet | Duct Bank Feet
Posted by | CITY X | DR. DIST. | COUNTY AIR | STATE RD | FAA | WMD | RR XING | COUNTY RD. | TRANSM.
Telephone Request? YES ☒ NO ☐ | DATV Request? YES ☒ NO ☐

FPL

DESIGNED BY	M. RUIZ
DRAWN BY	R. SEEHARINE/M.R.
DATE	04/15/12
MAP NO.	V-0255

0 10 20 40
FEET

62E-OH/UG CONVERSION
SUNSET ISLAND 3
V/O SUNSET DR AND 23 ST
MIAMI BEACH, FL

DWG NO. 6024-7-4
WR# 3085435 WE# D030-85-435

PLOT DATE: 7/25/2015 PLOT TIME: 10:14:05 AM CAD NAME: BWD

☐ INACCESSIBLE ☒ 13KV ☐ FUTURE 23KV ☐ 23KV ☒ SALT SPRAY ☐ NULL

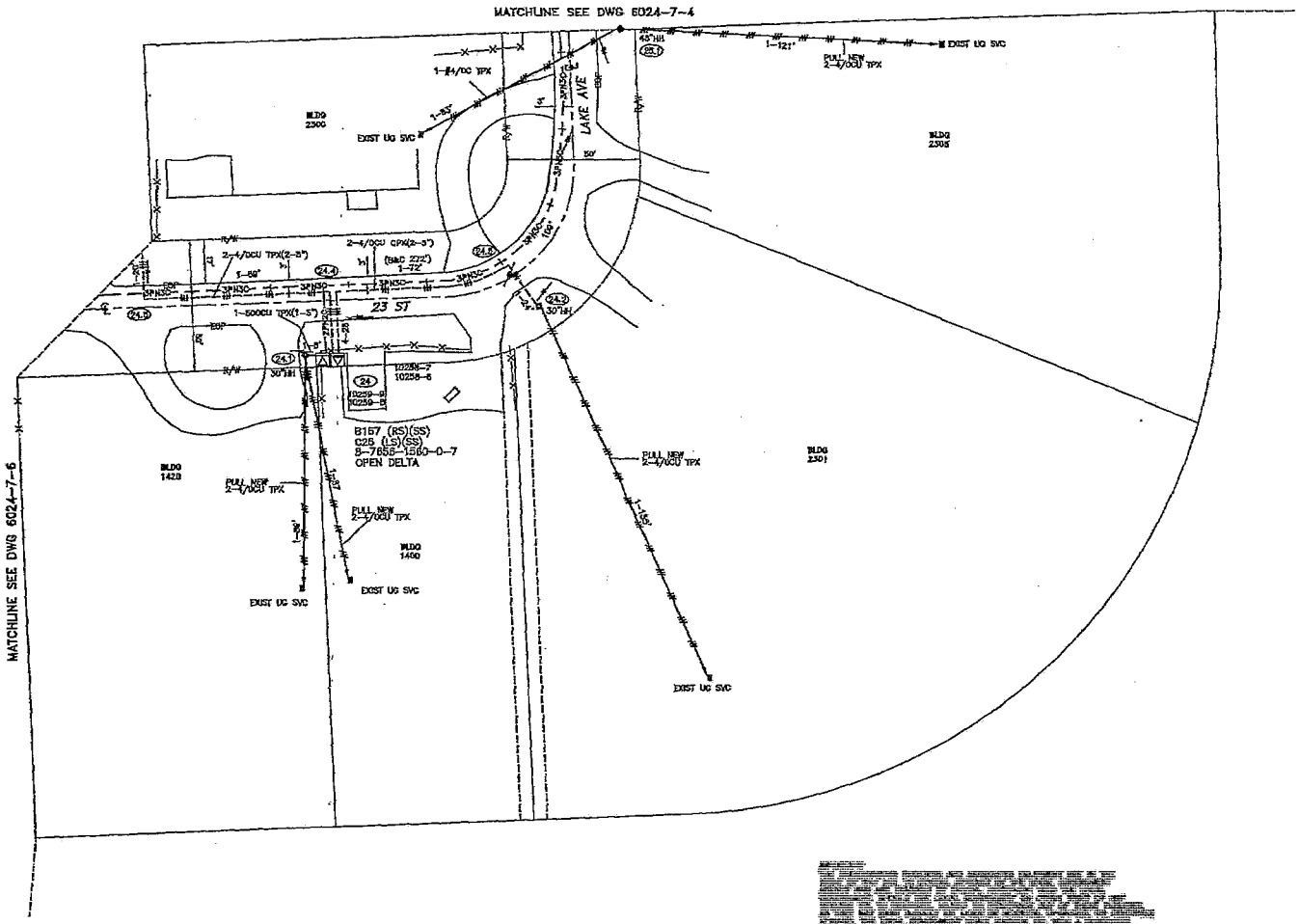

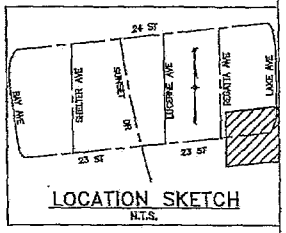

LOCATION SKETCH
N.T.S.

CONSTRUCTION NOTES – WO# 3085435

REQUIRED DRAWINGS
6024-7-1
6024-7-2
6024-7-3
6024-7-4
6024-7-5
6024-7-6
6024-7-7
6024-7-8
JS3085435-1(NOTES)

UTILITY CONTACT LIST
CALL SUNSHINE 1-800-432-4770

The location and existence of any facilities may not be relied upon by the supplier in responding to a bid or in complying with any contract. Supplier is responsible for evaluating site conditions both above and below ground including underground facility locations.

Ground Rod Information		
Location	Feet of Ground Rod Installed	Resistance (Ohms)

REFERENCE DWG's

6024-7-4
6024-7-6
6D24-B-2(SCH)

ATTENTION
ROW AGREEMENT

ASBUILT	3085435	0	04/16/12
	AUTH NO.	NO.	DATE

OH TO UG CONVERSION INSTALL VISTA CABINET 3 & 4 AT SUNSET ISLAND 3
REVISION

AS-BUILT COPY — AS-BUILT CREW PRINT
Job CERTIFIED COMPLETED as shown on this AS-BUILT print. Material changes shown on ROS.
All required ground rods have been driven & verified to be within FPL standards. Values are shown at as locations.

Easement? YES ☐ NO ☒ | Survey/Stake? YES ☒ NO ☐ | Work with SMO? YES ☐ NO ☐
Tree Work? YES ☐ NO ☒ | Designer/Stake? YES ☐ NO ☐ | CT/Special Mkt YES ☐ NO ☐
Map Posting? YES ☒ NO ☐ | Trench Feet | Duct Bank Feet
Posted by | Telephone Request? YES ☒ NO ☐ | CATV Request? YES ☒ NO ☐

CITY X	DR. DIST.	COUNTY AIR	STATE RD	FAA
WMD	RR XING	COUNTY RD.	TRANSIL	

FPL

DESIGNED BY	M. RUIZ
DRAWN BY	R. SEENARINE/M.R.
DATE	04/13/12
MAP NO.	V-0255

0 10 20 40 FEET

TWP:53 RNG:42 SEC:22 QTR:0

W/O CD
62E-OH/UG CONVERSION
SUNSET ISLAND 3
V/O SUNSET DR AND 23 ST
MIAMI BEACH, FL

DWG NO. 6024-7-5
WR# 3085435 WR# D030-85-435

PLOT DATE: 7/21/2015 PLOT TIME: 10:14:02 AM CAD NAME: SNB

☐ INACCESSIBLE ☒ 13KV ☐ FUTURE 23KV ☐ 23KV ☒ SALT SPRAY ☐ NULL

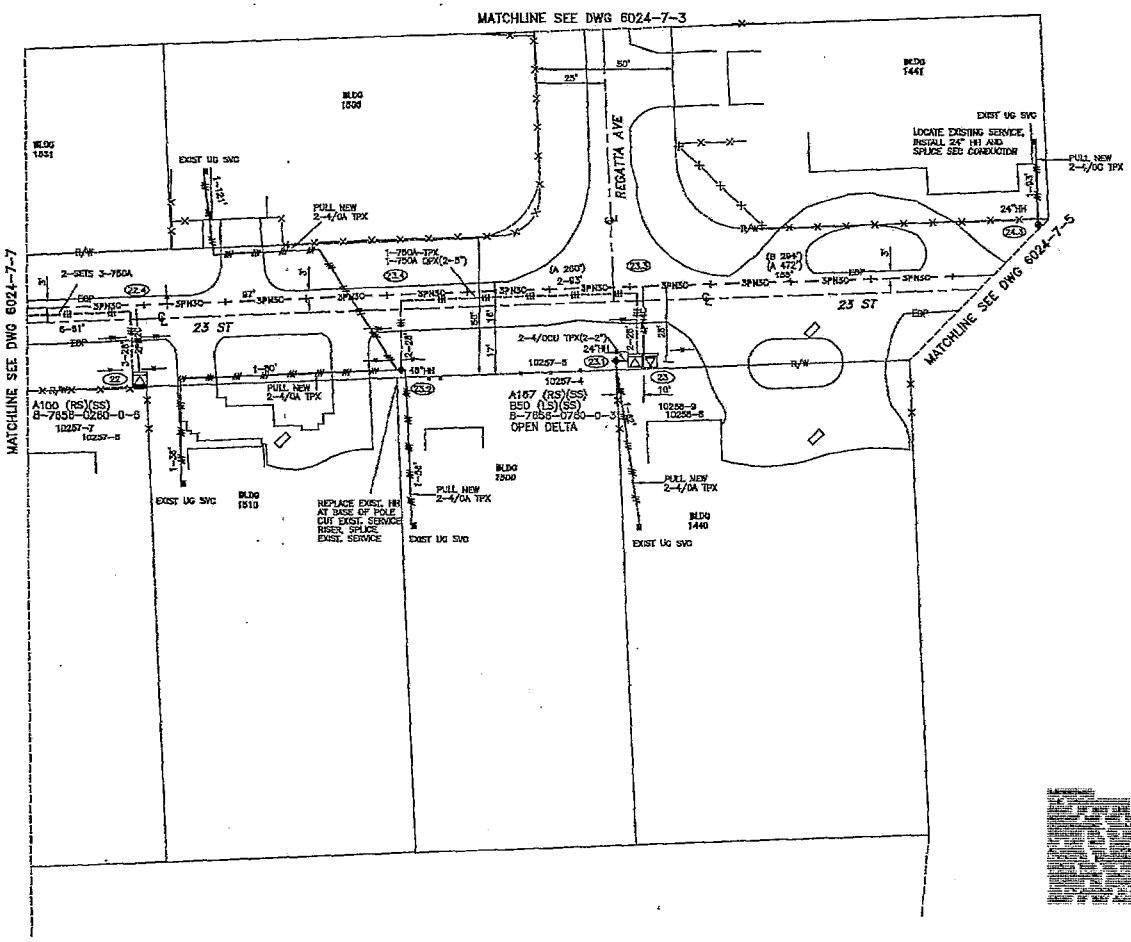

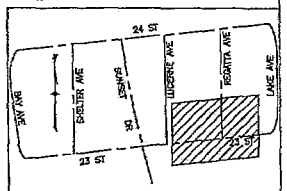

LOCATION SKETCH

N.T.S.

The location and existence of any facilities may not be relied upon by the supplier in responding to a bid or in complying with any contract. Supplier is responsible for evaluating site conditions both above and below ground including underground facility locations.

Ground Rod Information		
Location	Feet of Ground Rod Installed	Resistance (Ohms)

CONSTRUCTION NOTES – WR# 3085435

REQUIRED DRAWINGS
6024-7-1
6024-7-2
6024-7-3
6024-7-4
6024-7-5
6024-7-6
6024-7-7
6024-7-8
JS3085435-1(NOTES)

UTILITY CONTACT LIST
CALL SUNSHINE 1-800-432-4770

REFERENCE DWG's

6024-7-3
6024-7-5
6024-7-7
6024-8-2(SCH)

ATTENTION
ROW AGREEMENT

ASBUILT	AUTH NO.	NO.	DATE	REVISION
	3085435	0	04/16/12	OH TO UG CONVERSION INSTALL VISTA CABINET 3 & 4 AT SUNSET ISLAND 3

AS-BUILT COPY | AS-BUILT CREW PRINT
Job CERTIFIED COMPLETED as shown on this AS-BUILT print. Material changes shown on ROS.
All required ground rods have been driven & verified to be within FPL standards. Values are shown at all locations.

Easement? YES ☐ NO ☒ | Survey/Stake? YES ☒ NO ☐ | Work with SMC? YES ☐ NO ☐
Tree Work? YES ☐ NO ☒ | Designer/Stake? YES ☐ NO ☐ | CT/Special Mtr? YES ☐ NO ☐
Map Posting? YES ☒ NO ☐ | Trench Feet | Duct Bank Feet
Posted by | Telephone Request? YES ☒ NO ☐ | CATV Request? YES ☒ NO ☐

CITY X	DR. DIST.	COUNTY AIR	STATE RD	FAA
WMD	RR XING	COUNTY RD.	TRANSM.	

FPL

DESIGNED BY	M. RUIZ
DRAWN BY	R. SEENARINE/M.R.
DATE	04/16/12
MAP NO.	V-0255

0 10 20 40 FEET

W/O CD
62E-OH/UG CONVERSION
SUNSET ISLAND 3
V/O SUNSET DR AND 23 ST
MIAMI BEACH, FL

DWG NO. 6024-7-6
WR: 3085435 WR: D030-85-435

PLOT DATE: 7/23/2015 PLOT TIME: 10:12:58 AM CAD NAME: DWG

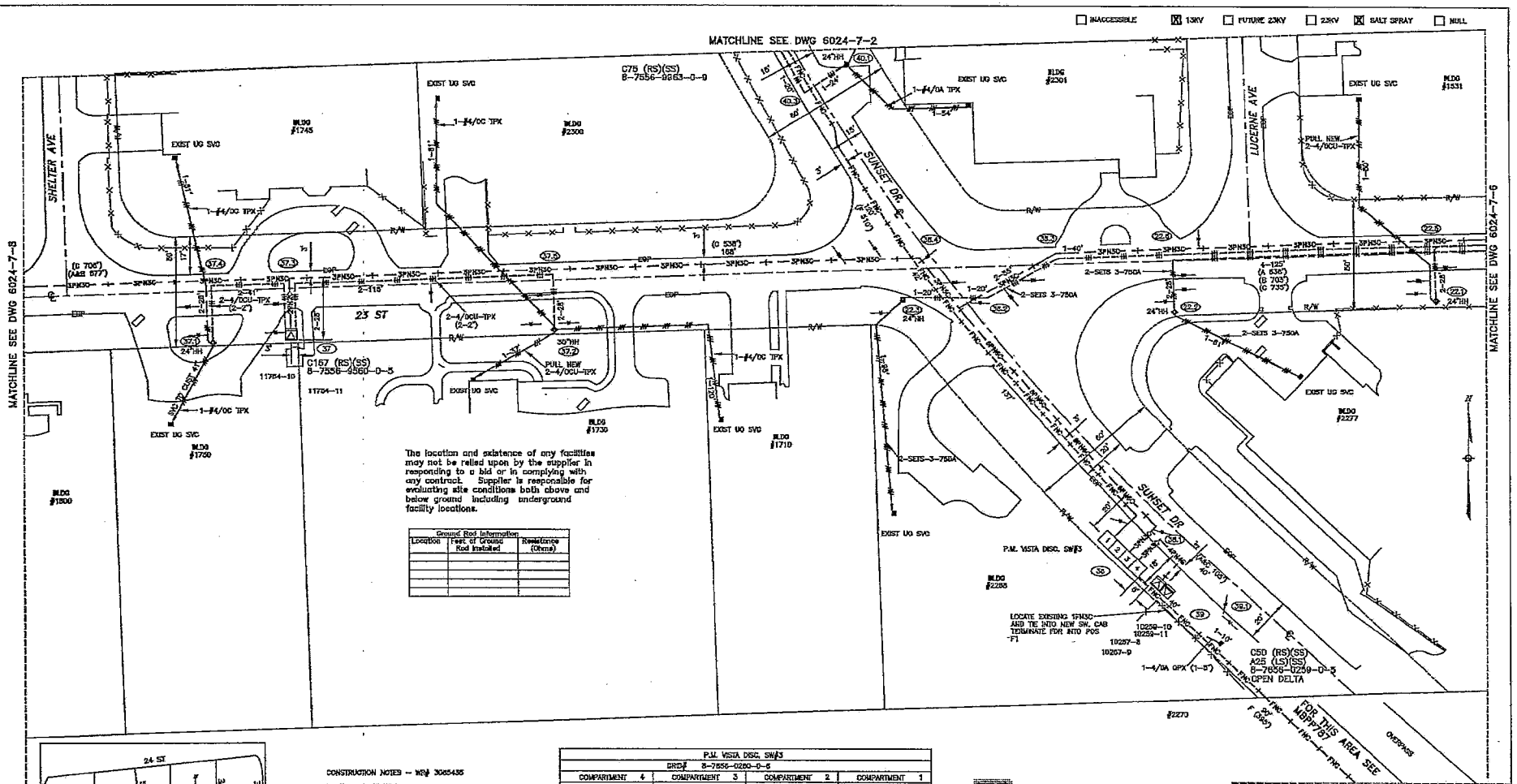

The location and existence of any facilities may not be relied upon by the supplier in responding to a bid or in complying with any contract. Supplier is responsible for evaluating site conditions both above and below ground including underground facility locations.

Ground Rod Information		
Location	Feet of Ground Rod Installed	Resistance (Ohms)

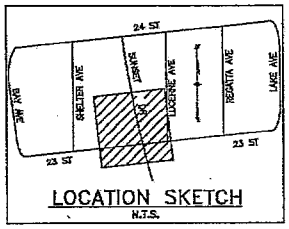

LOCATION SKETCH
N.T.S.

CONSTRUCTION NOTES – WR# 3085435

REQUIRED DRAWINGS
6024-7-1
6024-7-2
6024-7-3
6024-7-4
6024-7-5
6024-7-6
6024-7-7
6024-7-8
JS3085435-1(NOTES)
UTILITY CONTACT LIST
CALL SUNSHINE 1-800-432-4770

P.M. VISTA DISC. SW#3			
GRID# 8-7656-0260-0-6			
COMPARTMENT 4	COMPARTMENT 3	COMPARTMENT 2	COMPARTMENT 1
A12057-10 B12056-10 C12059-12 FUSE 3# @ 80 "E" 8-7656-0260-4-9	A11752-8 B11763-10 C11754-12 FUSE 3# @ 80 "E" 8-7655-0260-3-1	SW.#41663 8-7656-0259-2-2 SOUTH TO SW.#40435	SW.#41662 8-7656-0260-1-4 NORTH TO SW.#40437

ATTENTION
ROW AGREEMENT

REFERENCE DWG's

6024-7-2, MBPP787
6024-7-6, 6024-8-2(SCH)
6024-7-8
6024-6-2
6024-9-2

TWP:53 RNG:42 SEC:28 QTR:D

	3085435	0	04/18/12	OH TO UG CONVERSION INSTALL VISTA CABINET 3 & 4 AT SUNSET ISLAND 3
ASBUILT	AUTH NO.	NO.	DATE	REVISION

AS-BUILT COPY | AS-BUILT CREW PRINT
Service Cert. Date | Foreman's Signature Date
Job CERTIFIED COMPLETED as shown on this AS-BUILT print. Material changes shown on RDS.
Supervisor's Signature Date
All required ground rods have been driven & verified to be within FPL standards. Values are shown at all locations.
Foreman's Signature Date

Easement? YES ☐ NO ☒	Survey/Stake? YES ☒ NO ☐	Work with SMO? YES ☐ NO ☐			
Tree Work? YES ☐ NO ☒	Designer/Stake? YES ☐ NO ☐	CT/Special Mtr? YES ☐ NO ☐			
Map Posting? YES ☒ NO ☐	Trench Feet	Duct Bank Feet			
PERMIT REQD	CITY X	DR. DIST.	COUNTY AIR	STATE RD	FAA
	WMD	RR XING	COUNTY RD.	TRANSM.	
Posted by	Telephone Request? YES ☒ NO ☐	CATV Request? YES ☒ NO ☐			

FPL

DESIGNED BY	M. RUIZ
DRAWN BY	R. BEDIARINE/M.R.
DATE	04/18/12
MAP NO.	V-0255

0 10 20 40
FEET

M/A: CD
62E-OH/UG CONVERSION
SUNSET ISLAND 3
V/O SUNSET DR AND 23 ST
MIAMI BEACH, FL

DWG NO. 6024-7-7
WR:3085435 WR:D030-85-435

PLOT DATE: 8/20/2015 PLOT TIME: 3:12:52 PM CAD NAME: JCT

☐ INACCESSIBLE ☒ 13KV ☐ FUTURE 23KV ☐ 23KV ☒ SALT SPRAY ☐ NULL

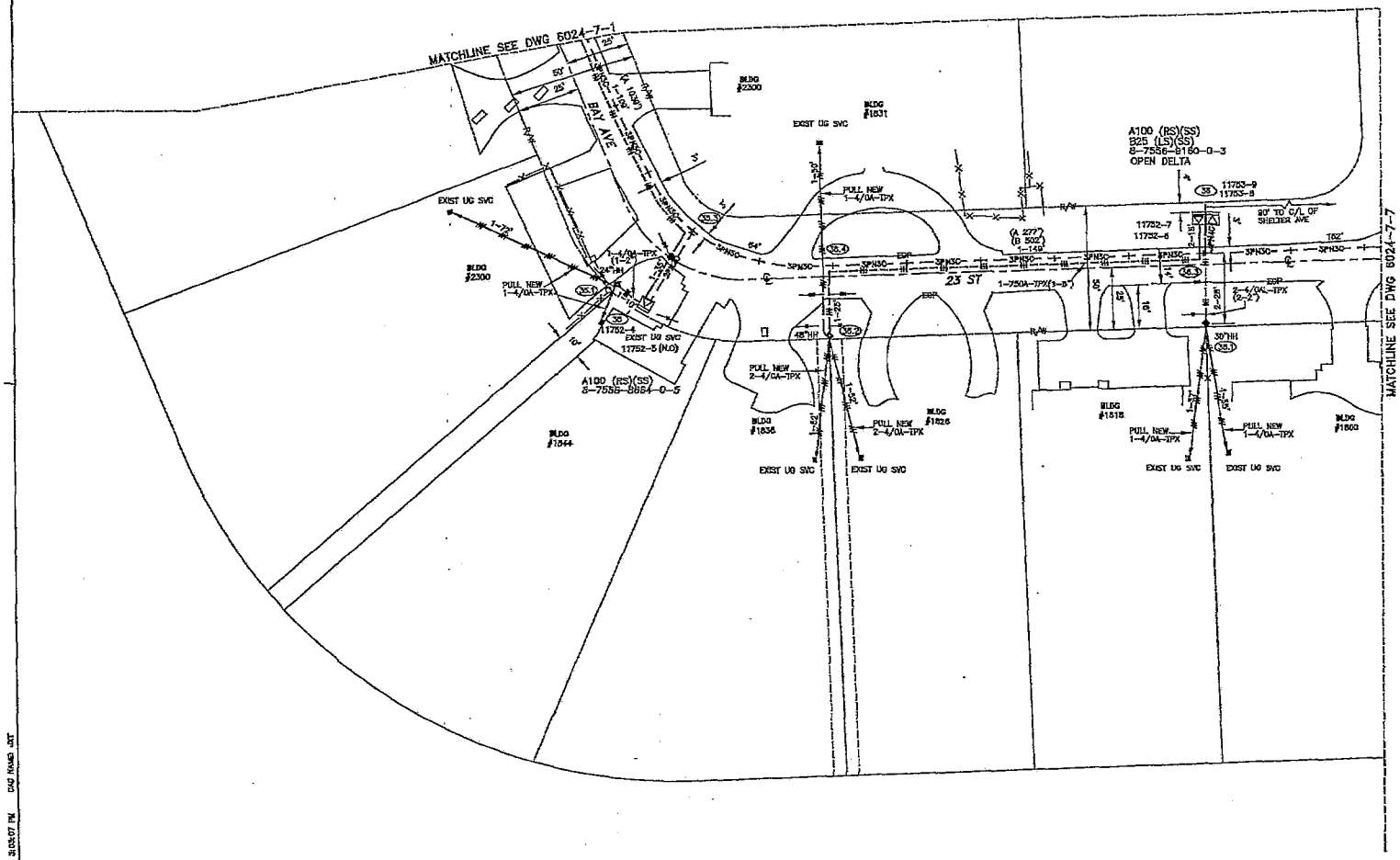

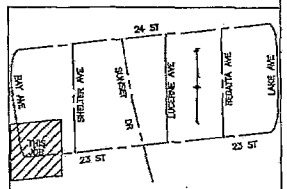

LOCATION SKETCH

N.T.S.

The location and existence of any facilities may not be relied upon by the supplier in responding to a bid or in complying with any contract. *Supplier is responsible for evaluating site conditions both above and below ground including underground facility locations.*

Ground Rod Information		
Location	Feet of Ground Rod Installed	Resistance (Ohms)

ATTENTION

ROW AGREEMENT

IMPORTANT:
THE UNDERGROUND FACILITIES AND ASSOCIATED EQUIPMENT ARE IN THE RIGHT OF WAY DUE TO SPECIAL REQUEST BY THE LOCAL GOVERNMENT AGENCY AND ARE COVERED BY SPECIAL AGREEMENT WITH THE LOCAL GOVERNMENT. SHOULD THE LOCAL GOVERNMENT OR OTHER RIGHT OF WAY REQUIRE FPL TO RELOCATE, ADJUST OR REARRANGE ANY OF THESE FACILITIES, AS THEY MAY EXIST INITIALLY OR LATER BE MODIFIED, UPGRADED, OR OTHERWISE ALTERED, THE LOCAL GOVERNMENT SHALL PROVIDE FPL WITH A SUBSTITUTE LOCATION, INCLUDING ANY EASEMENTS THAT MAY BE NECESSARY, AND PAY ANY COSTS FOR THE RELOCATION, ADJUSTMENT, OR REARRANGEMENT. THE LOCAL GOVERNMENT SHALL ALSO REIMBURSE FPL FOR ANY COSTS TO LOCATE, EXPOSE PROTECT OR SUPPORT THE FACILITIES, IN THE EVENT OF FUTURE CONSTRUCTION OR EXCAVATION IN CLOSE PROXIMITY TO THE FACILITIES. REQUEST A COPY OF THE RIGHT OF WAY AGREEMENT FROM DOC FILES/GO FOR FURTHER DETAILS.

CONSTRUCTION NOTES – WR# 3085435

REQUIRED DRAWINGS
6024-7-1
6024-7-2
6024-7-3
6024-7-4
6024-7-5
6024-7-6
6024-7-7
6024-7-8
JS3085435-1(NOTES)

UTILITY CONTACT LIST
CALL SUNSHINE 1-800-432-4770

REFERENCE DWG's

6024-7-1
6024-7-7
6024-8-1(SCH)

TWNP: 53 RNG: 42 SCC: 28 QTR: 0

ASBUILT	AUTH NO.	NO.	DATE	REVISION
	3085435	0	08/19/15	OH TO UG CONVERSION INSTALL VISTA CABINET 3 & 4 AT SUNSET ISLAND 3

AS-BUILT COPY — AS-BUILT CREW PRINT

Job CERTIFIED COMPLETED as shown on this AS-BUILT print. Material changes shown on ROS.

All required ground rods have been driven & verified to be within FPL standards. Values are shown at all locations.

Easement? YES ☐ NO ☒	Survey/Stake? YES ☒ NO ☐	Work with SMO? YES ☐ NO ☐			
Tree Work? YES ☐ NO ☒	Designer/Stake? YES ☐ NO ☐	GT/Special Mtr? YES ☐ NO ☐			
Map Posting? YES ☒ NO ☐	Trench Feet	Duct Bank Feet			
	PERMIT REQ'D: CITY X / DR. DIST. / COUNTY AIR / STATE RD / FAA				
	WMD / RR XING / COUNTY RD. / TRANSM.				
Posted by	Telephone Request? YES ☒ NO ☐	CATV Request? YES ☒ NO ☐			

FPL

DESIGNED BY	M. RUIZ
DRAWN BY	J. TORRES
DATE	8/19/15
MAP NO.	V-0255

0 10 20 40 FEET

W/K CD
62E-OH/UG CONVERSION
SUNSET ISLAND 3
V/O SUNSET DR AND 23 ST
MIAMI BEACH, FL

DWG NO. 6024-7-8
WR: 3085435 WR: D030-85-435

PLOT DATE: 8/20/2015 PLOT TIME: 3:03:07 PM CAD NAME: JXT

☐ INACCESSIBLE ☒ 13KV ☐ FUTURE 23KV ☐ 23KV ☒ SALT SPRAY ☐

BULKHEAD
BULKHEAD
SUNSET LAKE CANAL
W 25 ST
B/W
SS
ST LT
SN
W
G
R/W
30'
16'±
21'±
BRIDGE
SUNSET DR.
PAVEMENT
N46° 00' 00" W
44° 59' 06"
INST. FEEDER SPLICE BOX
ABANDON
FOR THIS AREA SEE DWG# 5024-5-2
W 22 ST
P.M. VISTA DISC. SW#3 FOR THIS AREA SEE DWG# 5024-7-7
FEEDER SPLICE BOX
LOC. UNKNOWN (FPL)
METER
P.M. VISTA DISC. SW#2
5+ 54'±
141'±
3-1000 KCMIL AL 25KV XPEJ IN 1-6" FLEXIBLE COND. & 2-6" FLEX. COND. SPARES BTW POLES

CONSTRUCTION NOTES -- WR# 3085439

REQUIRED DRAWINGS
5024-6-1
5024-6-2
5024-6-3
5024-6-4
5024-6-5
5024-6-6
JS3085439-1 (NOTES)
JS3085439-2
5024-9-1
5024-9-2
MBPP787

UTILITY CONTACT LIST
CALL SUNSHINE 1-800-432-4770

ATTENTION
ROW AGREEMENT

Ground Rod Information		
Location	Feet of Ground Rod Installed	Resistance (Ohms)

The location and existence of any facilities may not be relied upon by the supplier in responding to a bid or in complying with any contract. Supplier is responsible for evaluating site conditions both above and below ground including underground facility locations.

P.M. VISTA DISC. SW#3 E/L SIZ. 9'X6' SEE 5024-7-7 FOR INFO.
ASSUMED GRADE
FPL FDR SPL BX
PROP. C.B. BOTT. EL. 5.48'
BRIDGE & CANAL
ASSUMED GRADE
P.M. VISTA DISC. SW#2 E/L SIZ. 1'X6' SEE 5024-5-2 FOR INFO.
FPL FDR SPL BX
8" FND
8" PVC CONDUIT
FOR THIS AREA SEE DWG# 5024-5-2
8" SN (INV. UNK.)
8" SN (INV. UNK.)
BOTTOM ELEV. UNKNOWN
EXIST. PILES ELEV. UNKNOWN
PROPOSED 3-6" FLEX. CONDS.
SOLDIER PILES TIP PROP. ELEV. -18.14 FT (-5.7M)

REFERENCE DWG's
5024-6-1
5024-7-1
5024-8-1 (CKT)
5024-9-1 (CKT)

NOTE:
THIS DWG WAS CONVERTED FROM A MAP BRANCH, TRUE CAD DRAWING, ON 5/12/15.

ASBUILT	AUTH NO.	NO.	DATE	REVISION
	3085439	5	06/08/12	I.P.C.: INST PMDS# 4 & RENUMBER LOOP 11762, 11753 11764 & ADDED LOOP# 12057, 12058, 12059
	3085439	4	06/08/12	OH TO UG CONVERSION INSTALL VISTA CABINET 3 & 4 AT SUNSET ISLAND 3
	3085439	3	06/18/09	INST. FDR. PRIMARY, P.M.D.S.#1 & #2, AND TX'S, TO SVC SUNSET ISLAND 4
	3085439	2	06/18/09	INST. FDR. PRIMARY, P.M.D.S.#3, AND TX'S, TO SVC SUNSET ISLAND 3
	7222-04-883	0	03/16/04	ORIGINAL DWG

AS-BUILT COPY — Foreman's Signature — Date
AS-BUILT CREW PRINT — Foreman's Signature — Date
Job CERTIFIED COMPLETED as shown on this AS-BUILT print. Material changes shown on ROS.
Supervisor's Signature — Date
All required ground rods have been driven & verified to be within FPL standards. Values are shown at all locations.
Foreman's Signature — Date

Easement? YES ☐ NO ☐
Tree Work? YES ☐ NO ☐
Map Posting? YES ☒ NO ☐
Survey/Staked? YES ☒ NO ☐
Designer/Staked? YES ☐ NO ☐
Trench Feet
Work with SWDT YES ☐ NO ☐
CT/Special Mtr? YES ☐ NO ☐
Conf. Bank Feet
SEC. CITY | DR. DIST. | COUNTY AIR | STATE RD | FAA
ZONE WMD | RR XING | COUNTY RD. | TRANSM.
Staked by
Telephone Request? YES ☒ NO ☐
CATV Request? YES ☐ NO ☐

FPL

DESIGNED BY M. RUIZ
DRAWN BY R. SEENARINE
DATE 08/08/12
MAP NO. V-0255
HORZ. 0 10 20 40
VERT. 0 1.0 2.0 4.0

W/A CD
MIAMI BEACH
UNDERGROUND SYSTEMS
BTWN W 22 ST & 23 ST ON SUNSET DR
MIAMI BEACH-FLORIDA

DWG NO. MBPP787
WR# 3085439 TWR# D030-85-439

PLOT DATE: 5/12/2015 PLOT TIME: 11:29:37 AM CAD NAME: BOR

☐ INACCESSIBLE ☒ 13KV ☐ FUTURE 23KV ☐ 23KV ☒ SALT SPRAY ☐ NULL

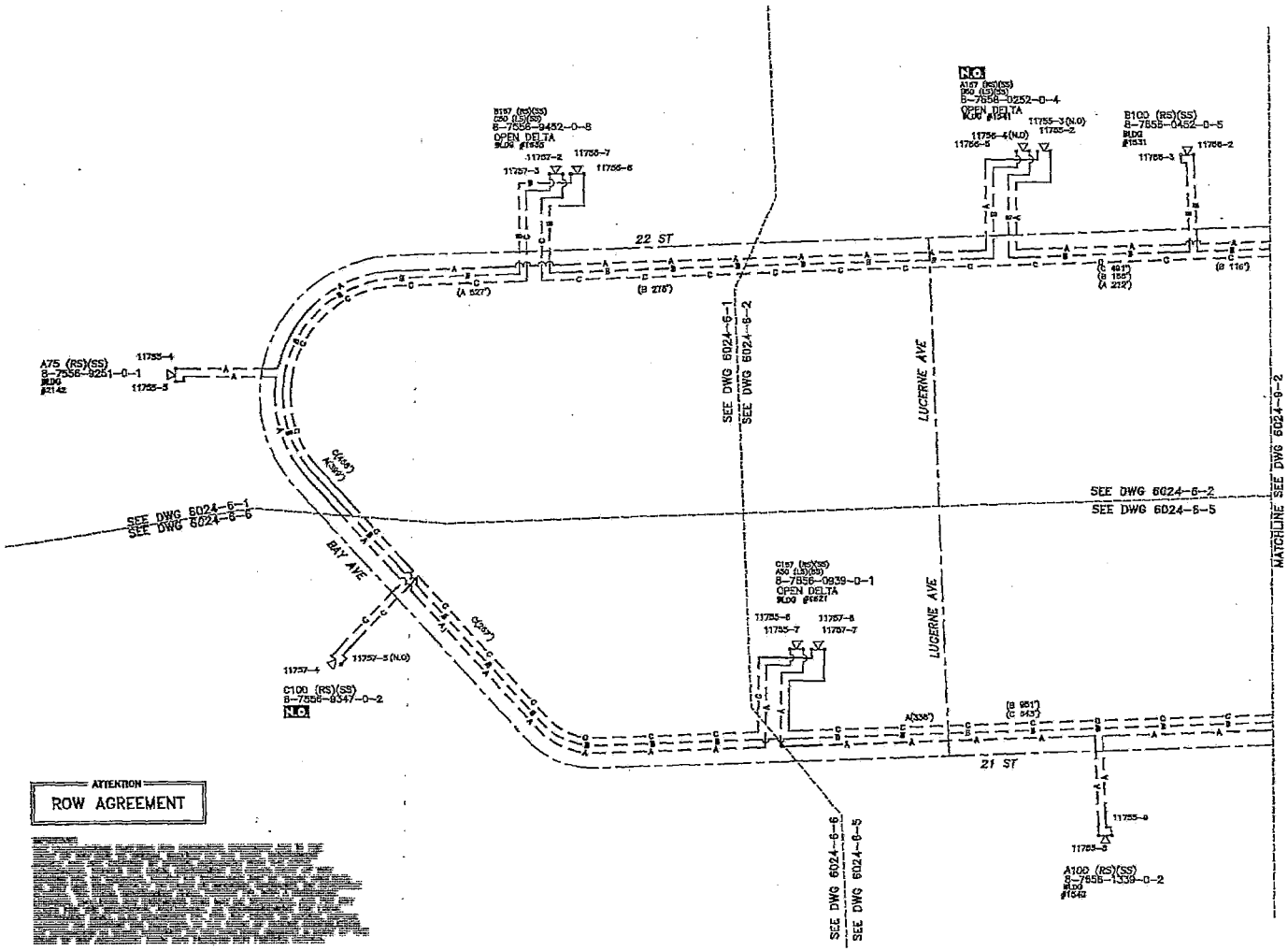

ATTENTION
ROW AGREEMENT

CONSTRUCTION NOTES – WR# 3085439

REFERENCE DRAWINGS
6024-6-1 6024-9-1
6024-6-2 6024-9-2
6024-6-3 MBPP787
6024-6-4
6024-6-5
6024-6-6
JS3085439-1 (NOTES)
JS3085439-2

UTILITY CONTACT LIST
CALL SUNSHINE 1-800-432-4770

REFERENCE DWG's

6024-6-1
6024-6-2
6024-6-5
6024-6-6
6024-9-2

ASBUILT	AUTH NO.	NO.	DATE	REVISION
	3085439	D	06/07/12	OH TO UG CONVERSION INSTALL VISTA CABINET 1 & 2, PULL PRIMARY & FOR CBL TO SVC SUNSET ISLAND 4

AS-BUILT COPY | AS-BUILT CREW PRINT

Job CERTIFIED COMPLETED as shown on this AS-BUILT print. Material changes shown on RDS.

All required ground rods have been driven & verified to be within FPL standards. Values are shown at all locations.

Easement? YES ☐ NO ☐ | Survey/Staked? YES ☒ NO ☐ | Work with SMO? YES ☐ NO ☐
Tree Work? YES ☐ NO ☐ | Designer/Staked? YES ☐ NO ☐ | GT/Special Mtr? YES ☐ NO ☐
Map Posting? YES ☒ NO ☐ | Trench Feet | Duct Bank Feet
CITY | DR. DIST. | COUNTY AIR | STATE RD | FAA
WMD | RR XING | COUNTY RD. | TRANSM.
Posted by | Telephone Request? YES ☒ NO ☐ | CATV Request? YES ☐ NO ☐

FPL

DESIGNED BY	M. RUIZ
DRAWN BY	R. SEENARINE
DATE	06/07/12
MAP NO.	V-0255

0 N.T.S FEET

M/A: CD
62E-OH/UG CONVERSION
SUNSET ISLAND 4
V/O SUNSET DR & 21 ST
MIAMI BEACH, FL

DWG NO. 6024-9-1
WR# 3085439 WR# D030-85-439

PLOT DATE: 6/12/2015 PLOT TIME: 12:31:50 PM CAD NAME: TXG

☐ INACCESSIBLE ☒ 13KV ☐ FUTURE 23KV ☐ 23KV ☒ SALT SPRAY ☐ NULL

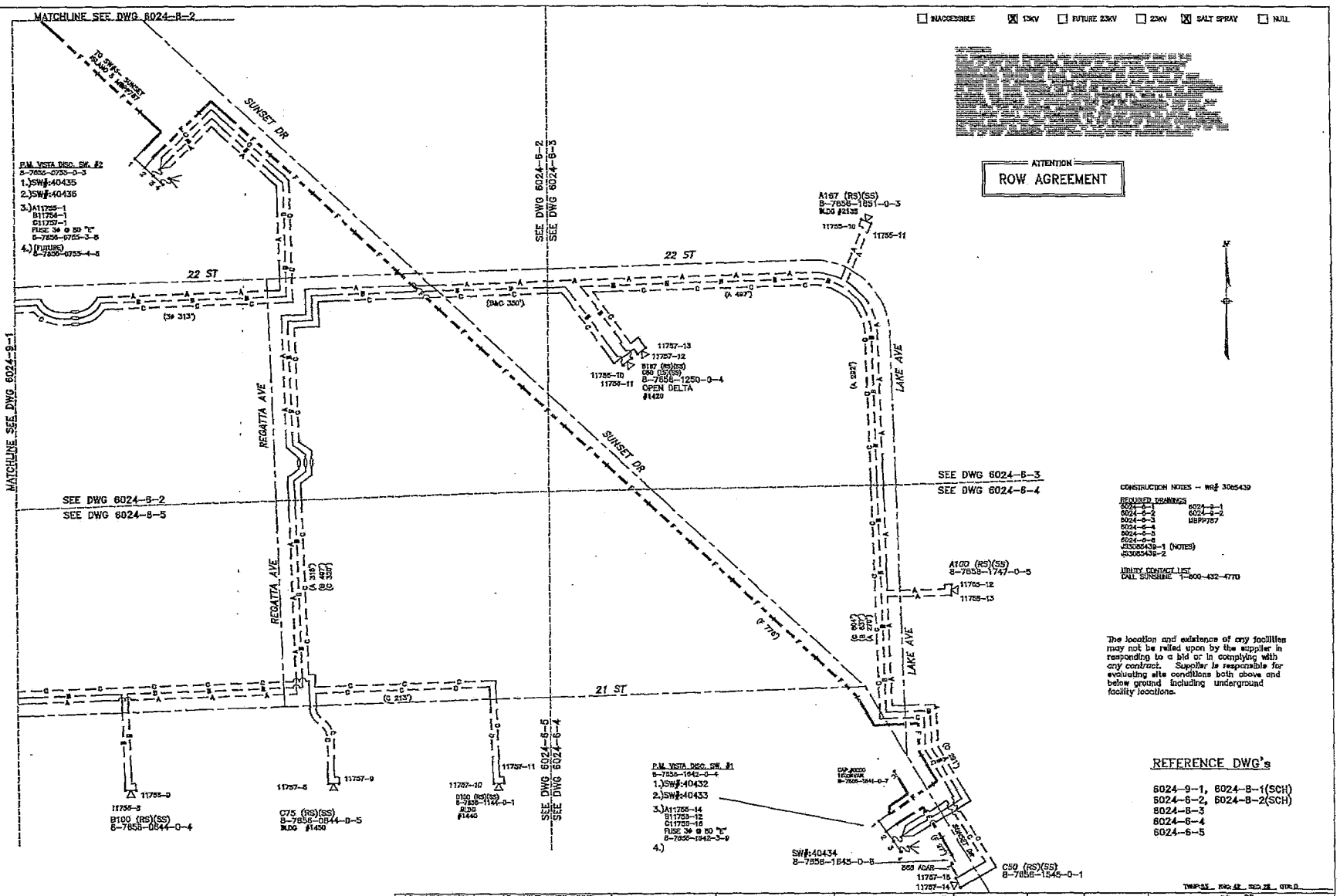

ATTENTION
ROW AGREEMENT

CONSTRUCTION NOTES -- WR# 3085439

REQUIRED DRAWINGS

6024-8-1	6024-9-1
6024-8-2	6024-9-2
6024-8-3	MBPP757
6024-8-4	
6024-8-5	
6024-6-2	
J03085439-1 (NOTES)	
J03085439-2	

UTILITY CONTACT LIST
CALL SUNSHINE 1-800-432-4770

The location and existence of any facilities may not be relied upon by the supplier in responding to a bid or in complying with any contract. Supplier is responsible for evaluating site conditions both above and below ground including underground facility locations.

REFERENCE DWG's

6024-9-1, 6024-8-1(SCH)
6024-6-2, 6024-8-2(SCH)
6024-8-3
6024-6-4
6024-6-5

PLOT DATE: 8/12/2015 PLOT TIME: 10:20:52 PM CAD NAME: TRD																	
	3085439	D	06/07/12	OH TO UG CONVERSION INSTALL VISTA CABINET 1 & 2, PULL PRIMARY & FDR CBL TO SVC SUNSET ISLAND 4													
ASBUILT	AFIN NO.	NO.	DATE	REVISION													

AS-BUILT COPY — AS-BUILT CREW PRINT
Job CERTIFIED COMPLETED as shown on this AS-BUILT print. Material changes shown on ROS.
All marked ground rods have been driven & verified to be within FPL standards. Value are shown at or near location.

Easement? YES ☐ NO ☐ | Survey/Stake? YES ☒ NO ☐ | Work with SMO? YES ☐ NO ☐
Tree Work? YES ☐ NO ☐ | Designer/Stake? YES ☐ NO ☐ | CT/Special Mtr? YES ☐ NO ☐
Map Posting? YES ☒ NO ☐ | Trench Feet | Duct Bank Feet
Posted by | Telephone Request? YES ☒ NO ☐ | CATV Request? YES ☐ NO ☐

CITY	DR. DIST.	COUNTY AR	STATE RD	FAA	
RWD	RR XING	COUNTY RD.	TRANSM.		

FPL

DESIGNED BY	M. RUIZ	62E-OH/UG CONVERSION SUNSET ISLAND 4
DRAWN BY	R. SEENARINE	V/O SUNSET DR & 21 ST MIAMI BEACH, FL
DATE	06/07/12	
MAP NO.	V-0255	
0	N.T.S.	DWG NO. 6024-9-2
	FEET	WR# 3085439 WMS D030-85-439

TWP 53 RNG 42 SEC 28 QTR D

☐ INACCESSIBLE ☒ 13KV ☐ FUTURE 23KV ☐ 23KV ☒ SALT SPRAY ☐ NULL

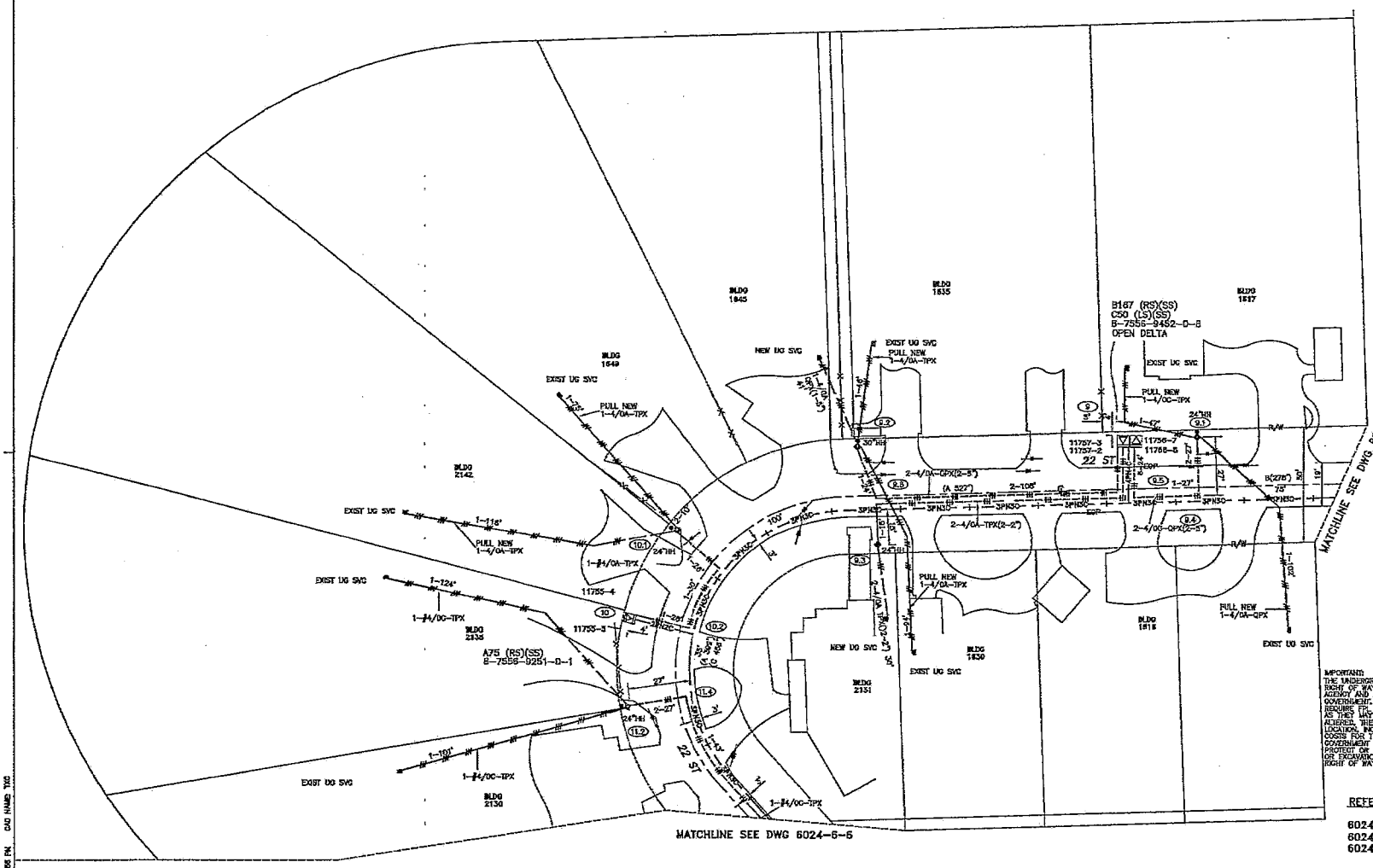

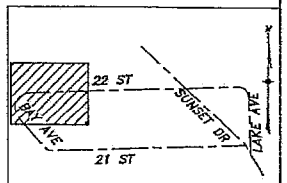

LOCATION SKETCH

N.T.S.

The location and existence of any facilities may not be relied upon by the supplier in responding to a bid or in complying with any contract. Supplier is responsible for evaluating site conditions both above and below ground including underground facility locations.

Ground Rod Information		
Location	Feet of Ground Rod Installed	Resistance (Ohms)

CONSTRUCTION NOTES – WR# 3085439

REQUIRED DRAWINGS
6024-6-1
6024-6-2
6024-6-3
6024-6-4
6024-6-5
6024-6-6
JS3085439-1 (NOTES)

UTILITY CONTACT LIST
CALL SUNSHINE 1-800-432-4770

ATTENTION
ROW AGREEMENT

IMPORTANT:
THE UNDERGROUND FACILITIES AND ASSOCIATED EQUIPMENT ARE IN THE RIGHT OF WAY DUE TO SPECIAL REQUEST BY THE LOCAL GOVERNMENT AGENCY AND ARE COVERED BY SPECIAL AGREEMENT WITH THE LOCAL GOVERNMENT. SHOULD THE LOCAL GOVERNMENT OR OTHER RIGHT OF WAY REQUIRE FPL TO RELOCATE, ADJUST OR REARRANGE ANY OF THESE FACILITIES, AS THEY MAY EXIST INITIALLY OR LATER BE MODIFIED, UPGRADED, OR OTHERWISE ALTERED, THE LOCAL GOVERNMENT SHALL PROVIDE FPL WITH A SUBSTITUTE LOCATION, INCLUDING ANY EASEMENTS THAT MAY BE NECESSARY, AND PAY ANY COSTS FOR THE RELOCATION, ADJUSTMENT, OR REARRANGEMENT. THE LOCAL GOVERNMENT SHALL ALSO REIMBURSE FPL FOR ANY COSTS TO LOCATE, EXPOSE PROTECT OR SUPPORT THE FACILITIES, IN THE EVENT OF FUTURE CONSTRUCTION OR EXCAVATION IN CLOSE PROXIMITY TO THE FACILITIES. REQUEST A COPY OF THE RIGHT OF WAY AGREEMENT FROM DOC FILES/GO FOR FURTHER DETAILS.

REFERENCE DWG's

6024-6-2
6024-6-6
6024-9-1(SCH)

ASBUILT	AUTH NO.	NO.	DATE	REVISION
	3085439	1	06/07/12	OH TO UG CONVERSION INSTALL VISTA CABINET 1 & 2, PULL PRIMARY & FOR CBL TO SVC SUNSET ISLAND 4
	3085439	0	04/20/12	PRELIMINARY DESIGN

AS-BUILT COPY | AS-BUILT CREW PRINT

Job CERTIFIED COMPLETED as shown on this AS-BUILT print. Material changes shown on ROS.

All required ground rods have been driven & verified to be within FPL standards. Values are shown at all locations.

Easement? YES ☐ NO ☒ | Survey/Stake? YES ☐ NO ☐ | Work with SMO? YES ☐ NO ☐
Tree Work? YES ☐ NO ☒ | Designer/Stake? YES ☐ NO ☐ | CT/Special Mtr? YES ☐ NO ☐
Map Posting? YES ☒ NO ☐ | Trench Feet | Duct Bank Feet
CITY X | DR. DIST. | COUNTY AIR | STATE RD | FAA
WMD | RR XING | COUNTY RD. | TRANSM.
Posted by | Telephone Request? YES ☒ NO ☐ | CATV Request? YES ☐ NO ☐

FPL

DESIGNED BY	M. RUIZ
DRAWN BY	R. SEENARINE/M.R.
DATE	06/07/12
MAP NO.	V-0255

0 10 20 40 FEET

W/A CD
62E-OH/UG CONVERSION
SUNSET ISLAND 4
V/C SUNSET DR & 21 ST
MIAMI BEACH, FL

DWG NO. 6024-6-1
WR# 3085439 TWR# D030-85-439

PLOT DATE: 6/12/2015 PLOT TIME: 12:23:56 PM CAD NAME: TXC

MATCHLINE SEE DWG 6024-7-7

☐ INACCESSIBLE ☒ 13KV ☐ FUTURE 23KV ☐ 23KV ☒ SALT SPRAY ☐ NULL

ATTENTION
ROW AGREEMENT

P.M. VISTA DISC. SW#2 GRID# 8-7656-0753-0-3			
COMPARTMENT 4	COMPARTMENT 3	COMPARTMENT 2	COMPARTMENT 1
(FUTURE) 8-7656-0753-4-0	A11755-1 S11750-1 C11757-1 FUSE 3# @ 80 "E" 8-7656-0753-3-0	SW.#40436 8-7656-0753-2-0 SOUTH TO SW.#40432	SW.#40435 8-7656-0753-1-1 NORTH TO SW.#41863

The location and existence of any facilities may not be relied upon by the supplier in responding to a bid or in complying with any contract. Supplier is responsible for evaluating site conditions both above and below ground including underground facility locations.

Ground Rod Information		
Location	Feet of Ground Rod Installed	Resistance (Ohms)

5,209 SQ. FT.
10.418 TONS

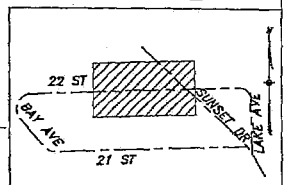

LOCATION SKETCH
N.T.S.

CONSTRUCTION NOTES – WR# 3085439

REQUIRED DRAWINGS
6024-6-1
6024-6-2
6024-6-3
6024-6-4
6024-6-5
6024-6-6
6024-6-8
3085439-1 (NOTES)

UTILITY CONTACT LIST
CALL SUNSHINE 1-800-432-4770

REFERENCE DWG's
6024-6-3
6024-6-4
6024-9-1
6024-9-2

MATCHLINE SEE DWG 6024-6-1

MATCHLINE SEE DWG 6024-6-3

MATCHLINE SEE DWG 6024-6-5

SUNSET DR

22 ST

LUCERNE AVE

REGATTA AVE

P.M. VISTA DISC. SW#2

B100 (RS)(SS)
8-7656-0452-0-5

A167 (RS)(SS)
B50 (LS)(SS)
8-7656-0252-0-4
OPEN DELTA

BLDG #1541
BLDG #1531
BLDG #1515
BLDG #2201
BLDG #1433
BLDG #2120
BLDG #1550
BLDG #1520
BLDG #1510
BLDG #2130
BLDG #2121

EXIST UG SVC
PULL NEW 1-4/0A-TPX
1-4/0A-TPX (1-2")
1-4/0A-GPX (1-5")
2-4/0A-TPX (2-2")
1-#4/0A-TPX
1-122'
1-133'
1-24'
1-60'
30"HH
24"HH
40"HH
50"DWL HH PRIMARY SPLICE BOX
(B&C 390')
(Se 313')
(D 115')

MATCHLINE SEE DWG 6024-8-5

AS-BUILT	3085439	0	04/20/12	OH TO UG CONVERSION INSTALL VISTA CABINET 1 & 2, PULL PRIMARY & FOR CEL TO SVC SUNSET ISLAND 4															
	AUTH NO.	NO.	DATE	REVISION															

AS-BUILT COPY — Job CERTIFIED COMPLETED as shown on this AS-BUILT print. Material changes shown on RDS.

AS-BUILT CREW PRINT — All required ground rods have been driven & verified to be within FPL standards. Values are shown at all locations.

Easement? YES ☐ NO ☒ | Survey/Stake? YES ☒ NO ☐ | Work with SMO? YES ☐ NO ☐
Tree Work? YES ☐ NO ☒ | Designer/Stake? YES ☐ NO ☐ | CT/Special Mbr? YES ☐ NO ☐
Map Posting? YES ☒ NO ☐ | Trench Feet | Duct Bank Feet
Posted by | Telephone Request? YES ☒ NO ☐ | CATV Request? YES ☒ NO ☐
PERMITS: CITY X | DR. DIST. | COUNTY AIR | STATE RD | FAA | MMD | RR XING | COUNTY RD. | TRANSIL

FPL

DESIGNED BY	M. RUIZ
DRAWN BY	H. SEENARINE/M.R.
DATE	04/20/12
MAP NO.	V-0255

0 10 20 40 FEET

W/o CD
62E-OH/UG CONVERSION
SUNSET ISLAND 4
V/O SUNSET DR & 21 ST
MIAMI BEACH, FL

DWG NO. 6024-6-2
WR# 3085439 DWN D030-85-439

PLOT DATE: 7/31/2015 PLOT TIME: 10:35:52 AM CAD NAME: DWG

☐ INACCESSIBLE ☒ 13KV ☐ FUTURE 23KV ☐ 23KV ☒ SALT SPRAY ☐ NULL

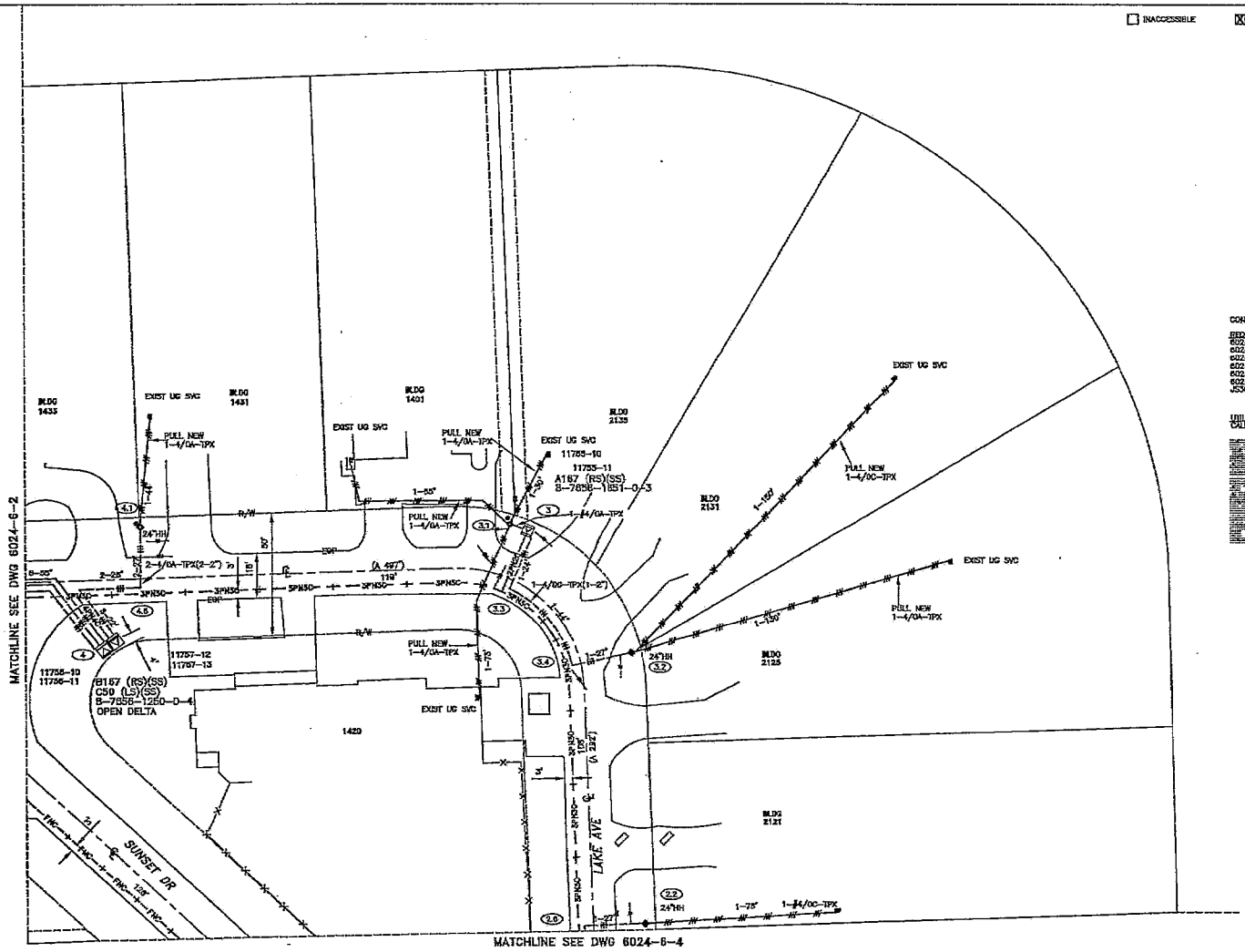

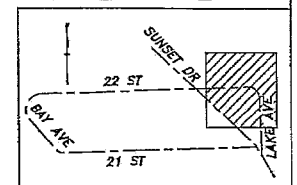

LOCATION SKETCH
N.T.S.

CONSTRUCTION NOTES -- WR# 3085439

REQUIRED DRAWINGS
6024-6-1
6024-6-2
6024-6-3
6024-6-4
6024-6-5
6024-6-6
JS3085439-1 (NOTES)

UTILITY CONTACT LIST
CALL SUNSHINE 1-800-432-4770

[redacted]

The location and existence of any facilities may not be relied upon by the supplier in responding to a bid or in complying with any contract. Supplier is responsible for evaluating site conditions both above and below ground including underground facility locations.

Ground Rod Information		
Location	Feet of Ground Rod Installed	Resistance (Ohms)

ATTENTION
ROW AGREEMENT

REFERENCE DWG's

6024-6-2
6024-6-4
6024-9-2

TWP:53 RNG:42 SEC:28 QTR:D

ASBUILT	AUTH NO.	NO.	DATE	REVISION
	3085439	0	04/20/12	OH TO UG CONVERSION INSTALL VISTA CABINET 1 & 2, PULL PRIMARY & FDR CDL TO SVC SUNSET ISLAND 4

AS-BUILT COPY — AS-BUILT CREW PRINT
Job CERTIFIED COMPLETED as shown on this AS-BUILT print. Material changes shown on ROS.
All required ground rods have been driven & verified to be within FPL standards. Values are shown at all locations.

Easement? YES ☐ NO ☒ | Survey/Stake? YES ☒ NO ☐ | Work with SMO? YES ☐ NO ☐
Tree Work? YES ☐ NO ☒ | Designer/Stake? YES ☐ NO ☐ | CT/Special Mtr? YES ☐ NO ☐
Map Posting? YES ☒ NO ☐ | Trench Feet | Duct Bank Feet
CITY X | DR. DIST. | COUNTY AIR | STATE RD | FAA
WMD | RR XING | COUNTY RD. | TRANSM.
Posted by | Telephone Request? YES ☒ NO ☐ | CATV Request? YES ☒ NO ☐

FPL

DESIGNED BY	M. RUIZ
DRAWN BY	R. SEEMARINE/M.R.
DATE	04/20/12
MAP NO.	V-0255

0 10 20 40 FEET

N/A: CD
62E-OH/UG CONVERSION
SUNSET ISLAND 4
V/O SUNSET DR & 21 ST
MIAMI BEACH, FL

DWG NO. 6024-6-3
WR# 3085439 WR# D030-85-439

PLOT DATE: 7/21/2015 PLOT TIME: 10:34:15 AM CAD NAME: EPB

☐ INACCESSIBLE ☒ 13KV ☐ FUTURE 23KV ☐ 23KV ☒ SALT SPRAY ☐ NULL

REFERENCE DWG's

6024-6-3
6024-6-5
6024-9-2(SCH)

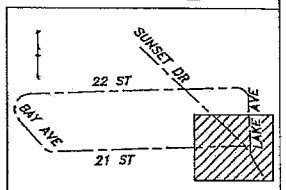

LOCATION SKETCH
N.T.S.

The location and existence of any facilities may not be relied upon by the supplier in responding to a bid or in complying with any contract. Supplier is responsible for evaluating site conditions both above and below ground including underground facility locations.

Ground Rod Information		
Location	Feet of Ground Rod Installed	Resistance (Ohms)

CONSTRUCTION NOTES – WR# 3085439

REQUIRED DRAWINGS
6024-6-1
6024-6-2
6024-6-3
6024-6-4
6024-6-5
6024-6-6
JS3085439-1 (NOTES)

UTILITY CONTACT LIST
CALL SUNSHINE 1-800-432-4770

ATTENTION
ROW AGREEMENT

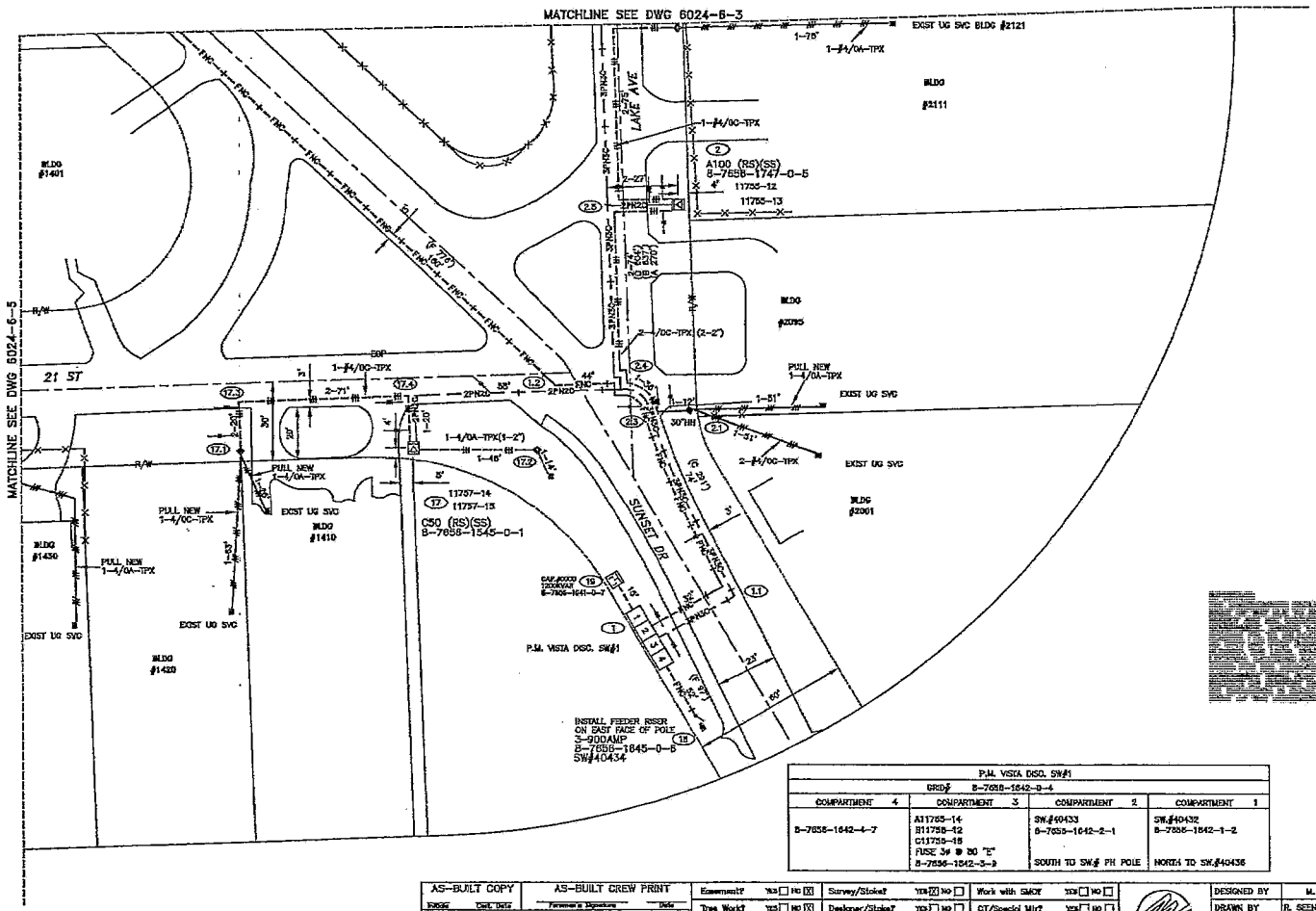

P.M. VISTA DISC. SW#1			
GRID# 8-7656-1642-0-4			
COMPARTMENT 4	COMPARTMENT 3	COMPARTMENT 2	COMPARTMENT 1
8-7656-1642-4-7	A11755-14 B11755-12 C11755-15 FUSE 3# @ 80 "E" 8-7656-1642-3-9	SW.#40433 8-7656-1642-2-1 SOUTH TO SW.# PH POLE	SW.#40432 8-7656-1642-1-2 NORTH TO SW.#40436

AS-BUILT COPY	AS-BUILT CREW PRINT	Easement? YES ☐ NO ☒	Survey/Stake? YES ☒ NO ☐	Work with SMOT YES ☐ NO ☐
Job CERTIFIED COMPLETED as shown on this AS-BUILT print. Material changes shown on RDS.		Tree Work? YES ☐ NO ☒	Designer/Stake? YES ☐ NO ☐	CT/Special Mtr? YES ☐ NO ☐
		Map Posting? YES ☒ NO ☐	Trench Feet	Duct Bank Feet
All required ground rods have been driven & verified to be within FPL standards. Values are shown at all locations.		Posted by	Telephone Request? YES ☒ NO ☐	CATV Request? YES ☒ NO ☐

DESIGNED BY	M. RUIZ				
DRAWN BY	R. SEEMARINE/M.R.				
DATE	04/20/12				
MAP NO.	V-0255				

0 10 20 40
FEET

R/A: CD
62E-OH/UG CONVERSION
SUNSET ISLAND 4
V/O SUNSET DR & 21 ST
MIAMI BEACH, FL

DWG NO. 6024-6-4
WR: 3085439 IWR: D030-85-439

ASBUILT	AUTH NO.	NO.	DATE	REVISION
	3085439	0	04/20/12	OH TO UG CONVERSION INSTALL VISTA CABINET 1 & 2, PULL PRIMARY & FOR CBL TO SVC SUNSET ISLAND 4

PLOT DATE: 7/31/2015 PLOT TIME: 7:16:32 AM CAD NAME: MDR

The location and existence of any facilities may not be relied upon by the supplier in responding to a bid or in complying with any contract. Supplier is responsible for evaluating site conditions both above and below ground including underground facility locations.

Ground Rod Information		
Location	Feet of Ground Rod Installed	Resistance (Ohms)

ATTENTION

ROW AGREEMENT

CONSTRUCTION NOTES – WR# 3085439

REQUIRED DRAWINGS
6024-6-1
6024-6-2
6024-6-3
6024-6-4
6024-6-5
6024-6-6
JS3085439-1 (NOTES)

UTILITY CONTACT LIST
CALL SUNSHINE 1-800-432-4770

REFERENCE DWG's

6024-6-2
6024-6-4
6024-6-6
6024-9-1
6024-9-2

☐ INACCESSIBLE ☒ 15KV ☐ FUTURE 23KV ☐ 23KV ☒ SALT SPRAY ☐ NULL

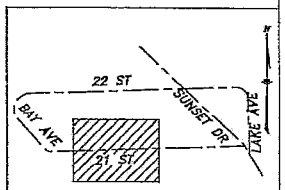

LOCATION SKETCH
N.T.S.

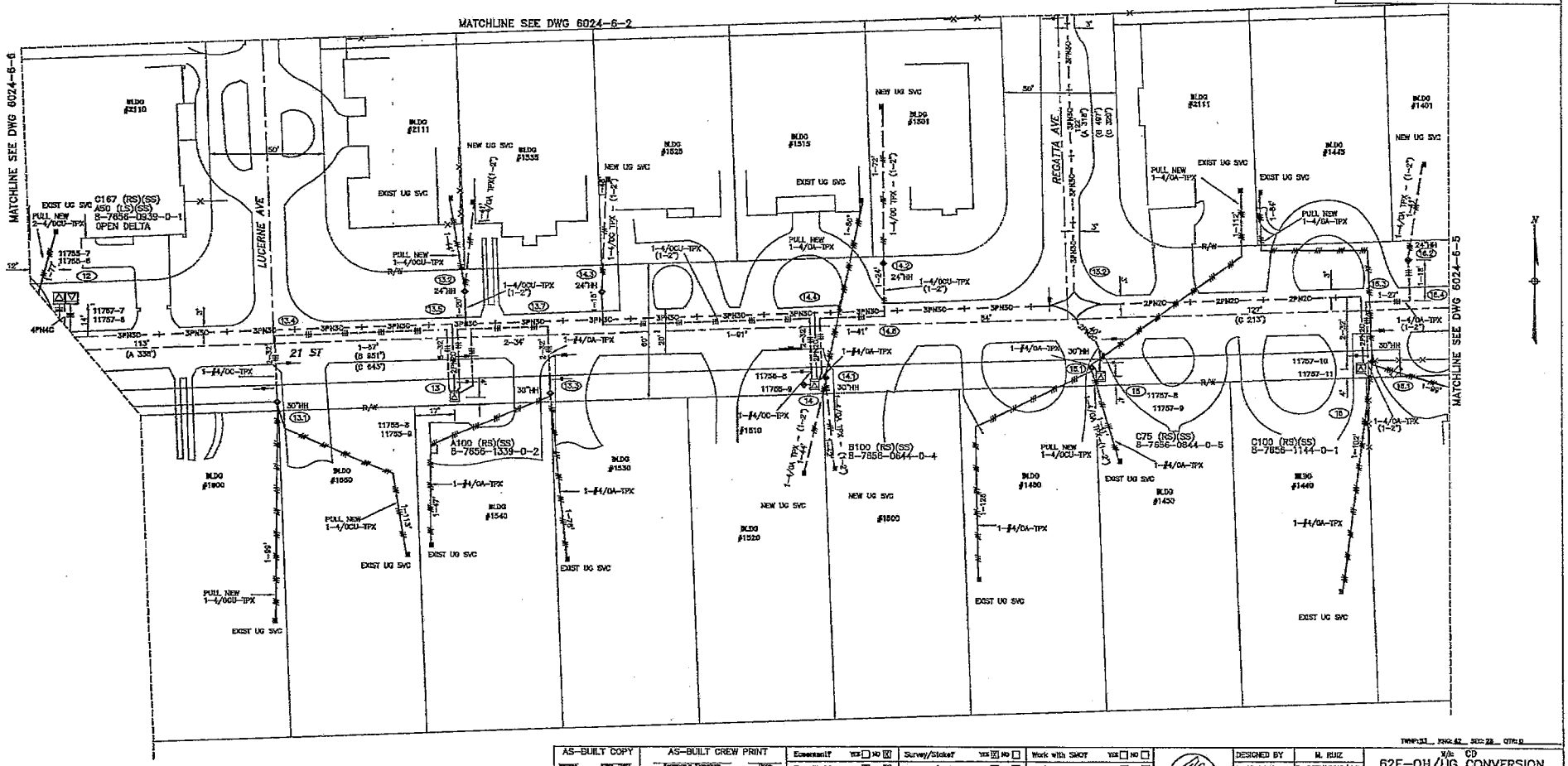

ASBUILT	AUTH NO.	NO.	DATE	REVISION
	3085439	0	04/20/12	OH TO UG CONVERSION INSTALL VISTA CABINET 1 & 2, PULL PRIMARY & FDR CBL TO SVC SUNSET ISLAND 4

AS-BUILT COPY | AS-BUILT CREW PRINT

Job CERTIFIED COMPLETED as shown on this AS-BUILT print. Material changes shown on ROS.

All required ground rods Have been driven & verified to be within FPL Standards. Values are shown at all locations.

Easement? YES ☐ NO ☒ | Survey/Stake? YES ☒ NO ☐ | Work with SMO? YES ☐ NO ☐
Tree Work? YES ☐ NO ☒ | Designer/Stake? YES ☐ NO ☐ | CT/Special Mtr? YES ☐ NO ☐
Map Posting? YES ☒ NO ☐ | Trench Feet | Duct Bank Feet
Posted by | Telephone Request? YES ☒ NO ☐ | CATV Request? YES ☒ NO ☐

CITY X	DR. DIST.	COUNTY AIR	STATE RD	FAA
WMD	RR KING	COUNTY RD.	TRANSM.	

FPL

DESIGNED BY	M. RUIZ
DRAWN BY	R. SEENARINE/M.R.
DATE	04/20/12
MAP NO.	V-0255

0 10 20 40 FEET

W/A: CD
62E-OH/UG CONVERSION
SUNSET ISLAND 4
V/O SUNSET DR & 21 ST
MIAMI BEACH, FL

DWG NO. 6024-6-5
WR# 3085439 WR# D030-85-439

PLOT DATE: 8/12/2015 PLOT TIME: 15:20:25 PM CAD NAME: TXC

☐ INACCESSIBLE ☒ 13KV ☐ FUTURE 23KV ☐ 23KV ☒ SALT SPRAY ☐ NULL

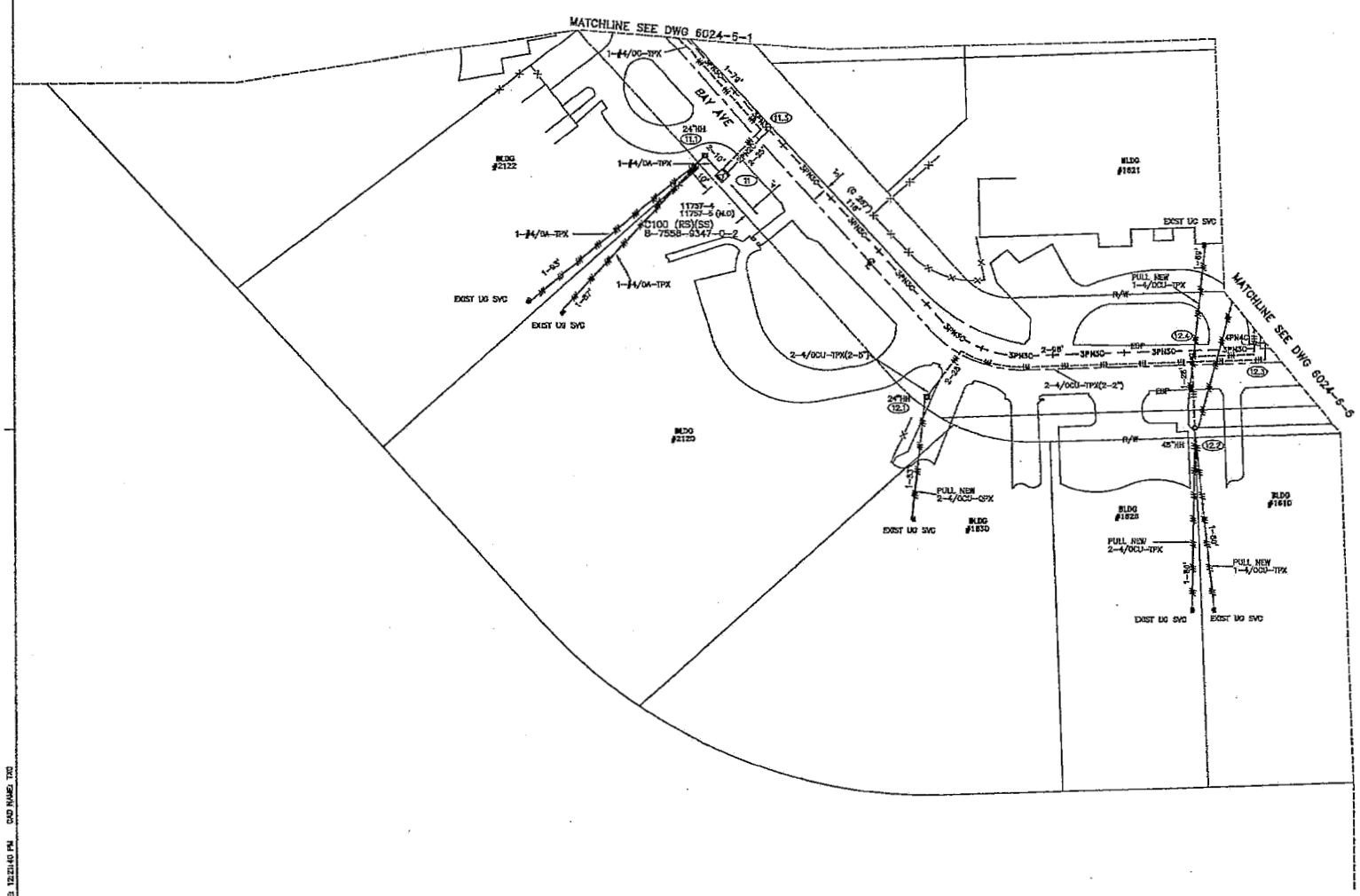

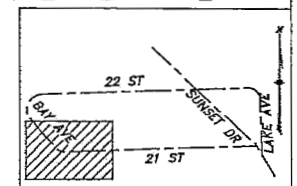

LOCATION SKETCH
N.T.S.

ATTENTION
ROW AGREEMENT

The location and existence of any facilities may not be relied upon by the supplier in responding to a bid or in complying with any contract. Supplier is responsible for evaluating site conditions both above and below ground including underground facility locations.

Ground Rod Information		
Location	Feet of Ground Rod Installed	Resistance (Ohms)

CONSTRUCTION NOTES – WR# 3085439

REQUIRED DRAWINGS
6024-6-1
6024-6-2
6024-6-3
6024-6-4
6024-6-5
6024-6-6
JS3085439-1 (NOTES)

UTILITY CONTACT LIST
CALL SUNSHINE 1-800-432-4770

REFERENCE DWG's

6024-6-1
6024-6-5
6024-9-1

TWP: 53 RNG: 42 SEC: 28 QTR: C

ASSULT	AUTH NO.	NO.	DATE	REVISION
	3085439	0	04/20/12	CH TO UG CONVERSION INSTALL VISTA CABINET 1 & 2, PULL PRIMARY & FDR CBL TO SVC SUNSET ISLAND 4

AS-BUILT COPY — AS-BUILT CREW PRINT

Job CERTIFIED COMPLETED as shown on this AS-BUILT print. Material changes shown on ROS.

All required ground rods have been driven & verified to be within FPL standards. Values are shown at all locations.

Easement? YES ☐ NO ☒ | Survey/Stake? YES ☒ NO ☐ | Work with SMO? YES ☐ NO ☐
Tree Work? YES ☐ NO ☒ | Designer/Stake? YES ☐ NO ☐ | CT/Special Mtr? YES ☐ NO ☐
Map Posting? YES ☒ NO ☐ | Trench Feet | Dust Bank Feet
CITY X | DR. DIST. | COUNTY AIR | STATE RD | FAA
WMD | RR XING | COUNTY RD. | TRANSM.
Posted by | Telephone Request? YES ☒ NO ☐ | CATV Request? YES ☒ NO ☐

FPL

DESIGNED BY	M. RUIZ
DRAWN BY	R. SEEMARINE/M.R.
DATE	04/20/12
MAP NO.	V-0255

0 10 20 40 FEET

M/R CD
62E-OH/UG CONVERSION
SUNSET ISLAND 4
V/O SUNSET DR & 21 ST
MIAMI BEACH, FL

DWG NO. 6024-6-6
WR# 3085439 IWR# D030-85-439

PLOT DATE: 5/12/2015 PLOT TIME: 12:21:40 PM CAD NAME: TXO

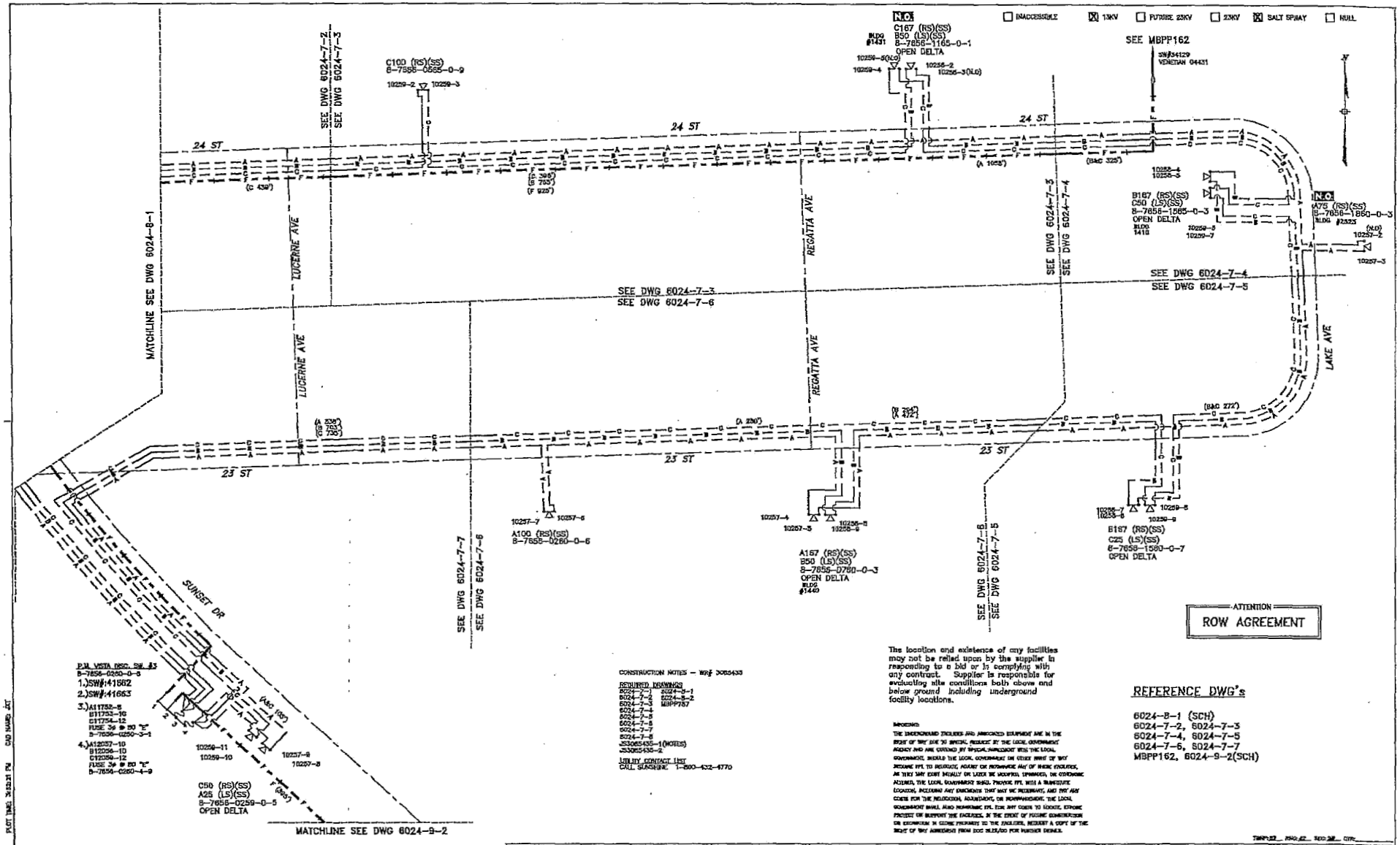

CONSTRUCTION NOTES – WR# 3085435

REQUIRED DRAWINGS
6024-7-1 6024-8-1
6024-7-2 6024-8-2
6024-7-3 MBPP167
6024-7-4
6024-7-5
6024-7-6
6024-7-7
6024-7-8
J53085435-1(NOTES)
J53085435-2

UTILITY CONTACT LIST
CALL SUNSHINE 1-800-432-4770

The location and existence of any facilities may not be relied upon by the supplier in responding to a bid or in complying with any contract. Supplier is responsible for evaluating site conditions both above and below ground including underground facility locations.

REMOVING
THE UNDERGROUND FACILITIES AND ANCHORED EQUIPMENT ARE IN THE RIGHT OF WAY DUE TO SPECIAL PRIVILEGE BY THE LOCAL GOVERNMENT AGENCY AND ARE GRANTED BY SPECIAL AGREEMENT WITH THE LOCAL GOVERNMENT. SHOULD THE LOCAL GOVERNMENT OR OTHER PARTS OF WAY BECOME FPL TO RELOCATE, ADJUST OR REMOVE ANY OF THESE FACILITIES, AS THEY MAY EXIST INITIALLY OR LATER BE MODIFIED, UPGRADED, OR OTHERWISE ALTERED, THE LOCAL GOVERNMENT SHALL PROVIDE FPL WITH A SUBSTITUTE LOCATION, INCLUDING ANY EASEMENTS THAT MAY BE NECESSARY, AND PAY ANY COSTS FOR THE RELOCATION, ADJUSTMENT, OR REMOVAL. THE LOCAL GOVERNMENT SHALL ALSO REIMBURSE FPL FOR ANY COSTS TO LOCATE, EXPOSE PROTECT OR SUPPORT THE FACILITIES. IN THE EVENT OF FUTURE CONSTRUCTION OR EXCAVATION IN CLOSE PROXIMITY TO THE FACILITIES, REQUEST A COPY OF THE RIGHT OF WAY AGREEMENT FROM ROW DEPT. FOR FURTHER DETAILS.

REFERENCE DWG's

6024-8-1 (SCH)
6024-7-2, 6024-7-3
6024-7-4, 6024-7-5
6024-7-6, 6024-7-7
MBPP162, 6024-9-2(SCH)

ASSBLY	AUTH NO.	NO.	DATE	REVISION
	3085435	2	06/06/12	OH TO UG CONVERSION INSTALL VISTA CABINET 3 & 4 AT SUNSET ISLAND 3
	3085435	1	05/10/11	I.P.C.: INST PMDS# 4 & RENUMBER LOOP 11732, 11753 11754 & ADDED LOOP# 12057, 12058, 12059
	3085435	0	06/05/09	INST. FDR, PRIMARY, P.M.D.S.#3, AND TXS, TO SVC SUNSET ISLAND 3

AS-BUILT COPY — Foreman's Signature — Date
Job CERTIFIED COMPLETED as shown on this AS-BUILT print. Material changes shown on ROS.
Supervisor's Signature — Date
All required ground rods have been driven & verified to be within FPL standards. Values are shown at all locations.
Foreman's Signature — Date

AS-BUILT CREW PRINT

Easement?	YES ☐ NO ☐	Survey/Stake?	YES ☒ NO ☐
Tree Work?	YES ☐ NO ☐	Designer/Stake?	YES ☐ NO ☐
Map Posting?	YES ☒ NO ☐	Trench Feet	
Posted by		Telephone Request?	YES ☒ NO ☐

Work with SMOF	YES ☐ NO ☐			
CT/Special Mbrs	YES ☐ NO ☐			
Duct Bank Feet				
CITY	DR. DIST.	COUNTY AIR	STATE RD	FAA
WMC	RR XING	COUNTY RD.	TRANSIL	
CATV Request?	YES ☐ NO ☐			

FPL

DESIGNED BY	M. RUIZ
DRAWN BY	R. HERRINGTON
DATE	06/06/12
MAP NO.	V-0253
0	10 FEET

W/C CD
OH TO URD CONVERSION
SUNSET ISLAND 3
SUNSET DR. N/O W. 22ND ST
MIAMI BEACH/ MIAMI DADE CNTY, FL

DWG NO. 6024-8-2
WR# 3085435 INST# D030-85-435

PLOT DATE 6/13/2012 PLOT TIME: 3:52:21 PM CAD NAME: JCT

☐ INACCESSIBLE ☒ 13KV ☐ FUTURE 23KV ☐ 23KV ☒ SALT SPRAY ☐ NULL

24 ST

23 ST

BAY AVE

SHELTER AVE

SUNSET DR

SEE DWG 6024-7-1
SEE DWG 6024-7-2

SEE DWG 6024-7-1
SEE DWG 6024-7-8

SEE DWG 6024-7-2
SEE DWG 6024-7-7

SEE DWG 6024-7-8
SEE DWG 6024-7-7

MATCHLINE SEE DWG 6024-8-2

11753-5
11753-7(NLO)
11754-8
11754-9(NLO)
C25 (LS)(SS)
B100 (RS)(SS)
B-7658-8565-0-7
OPEN DELTA
BLDG 1830
N.O.

B157 (RS)(SS)
B-7658-9060-0-6
BLDG 1825
11753-6
11753-4

D50 (RS)(SS)
B-7658-9257-0-0
BLDG 1821
11754-7
11754-6

D100 (RS)(SS)
B-7658-9765-0-0
BLDG 1743
11754-4
11754-5

A187 (LS)(SS)
B50 (RS)(SS)
B-7658-0065-0-9
OPEN DELTA
BLDG 1611
11752-3
11752-2
11752-1

(B 242')
(C 385')
(B 632')
(C 216')
(C 358')
(A48 223')
(C 706')
(A48 577')
(C 536')
(A 277')
(B 502')
(B 1030')

P.M. VISTA DISC. SW. # 4
B-7655-9566-0-3
1.) SW#40436
2.) SW#40437
3.) A11752-1
B11753-1
C11754-1
FUSE 3# @ 50 "E"
B-7658-9658-4-2
4.) A12057-1
B12058-1
C12059-1
FUSE 3# @ 50 "E"
B-7658-9656-3-0

11754-3
11754-2
D75 (RS)(SS)
B-7658-9753-0-9

A130 (RS)(SS)
B25 (LS)(SS)
B-7658-9160-0-3
OPEN DELTA
11753-8
11753-9
11752-6
11752-7

11752-5(NLO)
11752-4
N.O.
A100 (RS)(SS)
B-7658-9464-0-5
BLDG
#1844

11754-10
11754-11
C167 (RS)(SS)
B-7658-9560-0-6
BLDG
#1700

CONSTRUCTION NOTES — W.O. 3085435

SECURED DRAWINGS
6024-7-1 6024-8-1
6024-7-2 6024-8-2
6024-7-3 MEP9757
6024-7-4
6024-7-5
6024-7-6
6024-7-7
6024-7-8
JS3085435-1(NOTES)
JS3085435-2

UTILITY CONTACT LIST
CALL SUNSHINE 1-800-432-4770

The location and existence of any facilities may not be relied upon by the supplier in responding to a bid or in complying with any contract. Supplier is responsible for evaluating site conditions both above and below ground including underground facility locations.

IMPORTANT
THE UNDERGROUND ENCLOSER AND ANNOUNCED EQUIPMENT ARE IN THE RIGHT OF WAY DUE TO SPECIAL REQUEST BY THE LOCAL GOVERNMENT AGENCY AND ARE COVERED BY SPECIAL AGREEMENT WITH THE LOCAL GOVERNMENT. REFER THE LOCAL GOVERNMENT OR OTHER RIGHT OF WAY REQUIRE FPL TO RELOCATE, ADJUST OR REARRANGE ANY OF THESE FACILITIES, AS THEY MAY EXIST BEFORE OR LATER BE MODIFIED, UPGRADED, OR OTHERWISE ALTERED. THE LOCAL GOVERNMENT SHALL PROVIDE FPL WITH A REMOTE LOCATION, INCLUDING ANY EASEMENTS THAT MAY BE NECESSARY, AND PAY ANY COSTS FOR THE RELOCATION, ADJUSTMENT, OR REARRANGEMENT. THE LOCAL GOVERNMENT SHALL ALSO REIMBURSE FPL FOR ANY COSTS TO LOCATE, EXPOSE PROTECT OR SUPPORT THE FACILITIES, IN THE EVENT OF FUTURE CONSTRUCTION OR EXPANSION IN CLOSE PROXIMITY TO THE FACILITIES. PROVIDE A COPY OF THE RIGHT OF WAY AGREEMENT FROM DOT FILE/NO FOR FUTURE REFERENCE.

ATTENTION
ROW AGREEMENT

REFERENCE DWG's

B651-3
6024-7-1, 6024-7-2
6024-8-2 (SCH)
6024-7-7, 6024-7-8

ASBUILT	AUTH NO.	NO.	DATE	REVISION
	3085435	2	06/08/12	OH TO UG CONVERSION INSTALL VISTA CABINET 3 & 4 AT SUNSET ISLAND 3
	3085435	1	05/10/11	I.P.O.: INST PMOS# 4 & RENUMBER LOOP 11752, 11753 11754 & ADDED LOOP# 12057, 12058, 12059
	3085435	0	05/05/09	INST. FDR. PRIMARY, P.M.D.S.#3, AND TXS. TO SVC SUNSET ISLAND 3

AS-BUILT COPY — AS-BUILT CREW PRINT

Job CERTIFIED COMPLETED as shown on this AS-BUILT print. Material changes shown on RDS.

All required ground rods have been driven & verified to be within FPL standards. Values are shown at all locations.

Easement? YES ☐ NO ☐ | Survey/Stake? YES ☒ NO ☐ | Work with SMO? YES ☐ NO ☐
Tree Work? YES ☐ NO ☐ | Designer/Stake? YES ☐ NO ☐ | CT/Special Mat? YES ☐ NO ☐
Map Posting? YES ☒ NO ☐ | Trench Feet | Duct Bank Feet
Posted by | Telephone Request? YES ☒ NO ☐ | CATV Request? YES ☐ NO ☐

CITY	DR. DIST.	COUNTY AIR	STATE RD	FAA
RMD	RR XING	COUNTY RD.	TRANSM.	

FPL

DESIGNED BY	M. RUIZ
DRAWN BY	J. HEDRINGTON
DATE	06/08/12
MAP NO.	Y-0253
0 N.T.S. FEET	

M/A CD
OH TO URD CONVERSION
SUNSET ISLAND 3
SUNSET DR. N/O W. 22ND ST
MIAMI BEACH/ MIAMI DADE CNTY, FL

DWG NO. 6024-8-1
WR 3085435 DWR D030-85-435

PLOT DATED: 6/20/2012 PLOT TIME: 3:06:20 PM CAD NAME: AYT

SURVEY AS-BUILT NOTES

0000-00-000 MA-FB #6 PG.55 (1-3-52)

0000-00-000 MA-FB #11 PG.5 (8-20-60)

0000-00-000 MA-FB #176 PG.41-45 (1-3-52)

CONSTRUCTION NOTES — WR# 3085435

REQUIRED DRAWINGS
6024-7-1 6024-5-1
6024-7-2 6024-5-2
6024-7-3 MBPP162
6024-7-4
6024-7-5
6024-7-6
6024-7-7
6024-7-8
JS3085435-1(NOTES)
JS3085435-2

UTILITY CONTACT LIST
CALL SUNSHINE 1-800-432-4770

☐ INACCESSIBLE ☒ 13KV ☐ FUTURE 23KV ☐ 23KV ☒ SALT SPRAY ☐

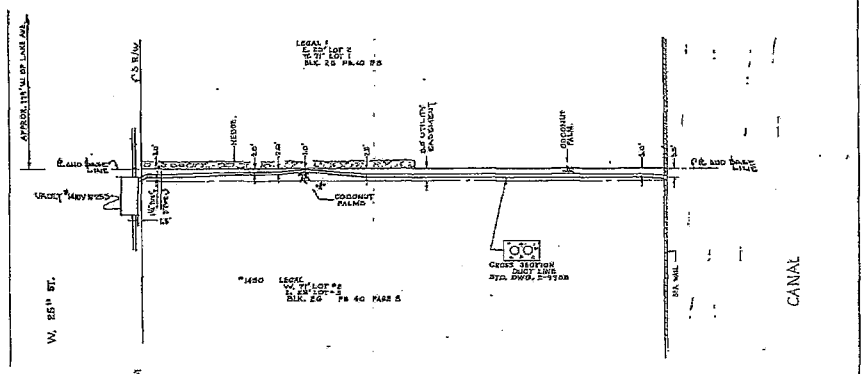

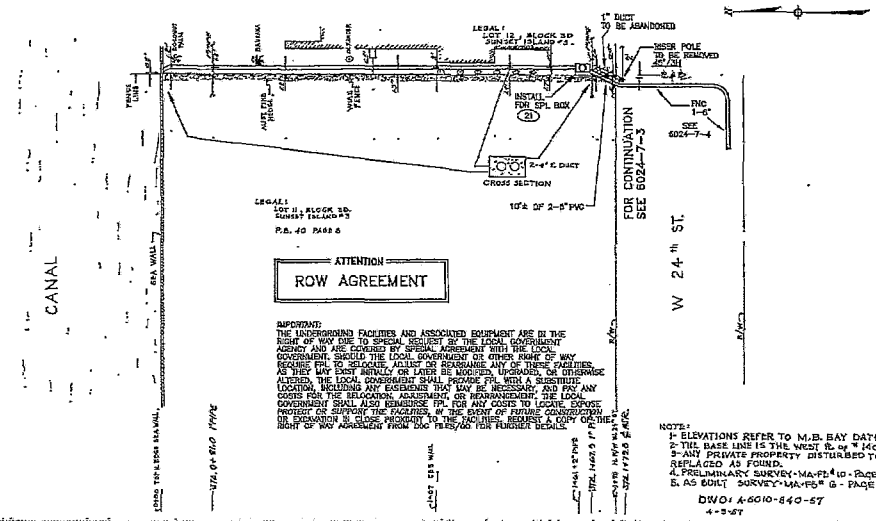

NOTE:
1- ELEVATIONS REFER TO M.B. BAY DATUM
2- THE BASE LINE IS THE WEST R/W OF "1450"
3- ANY PRIVATE PROPERTY DISTURBED TO BE REPLACED AS FOUND.
4. PRELIMINARY SURVEY - MA-FB #10 - PAGE 10
5. AS BUILT SURVEY - MA-FB# 11 - PG. 55

DWG: A5010-840-57
4-22-57

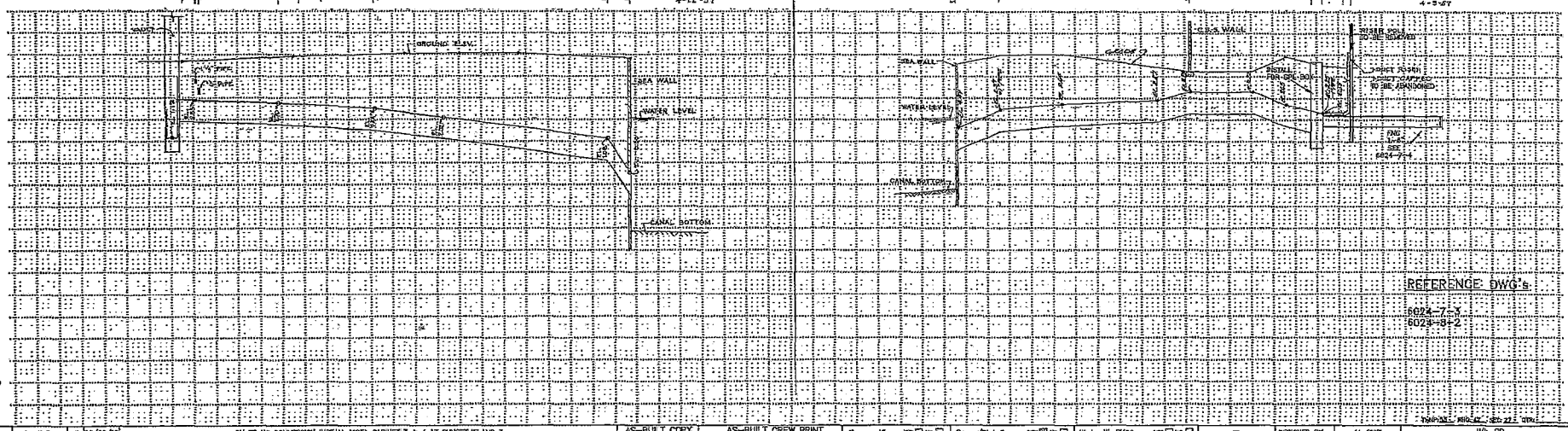

REFERENCE DWG's
6024-7-3
6024-8-2

	3085435	5	08/08/12	ON TO UG CONVERSION INSTALL VISTA CABINET 3 & 4 AT SUNSET ISLAND 3	
	1900-05-833	4	03/15/93	RELOCATED PVC'S	
	0000-00-000	3	03/13/93	AS BUILT	
	0000-00-000	2	09/29/60	AS BUILT LEFT HALF	
	0000-00-000	1	01/03/58	AS BUILT RIGHT HALF	
ASBUILT	AUTH NO.	NO.	DATE	REVISION	

AS-BUILT COPY — AS-BUILT CREW PRINT
Job CERTIFIED COMPLETED as shown on this AS-BUILT print. Material changes shown in RED.
All required ground rods have been driven & verified to be within FPL standards. Values are shown at all locations.

Posted by

Easement? YES ☐ NO ☐ Survey/Stake? YES ☒ NO ☐ Work with SMO? YES ☐ NO ☐
Tree Work? YES ☐ NO ☐ Designer/Stake? YES ☐ NO ☐ CT/Special Mkt YES ☐ NO ☐
Map Posting? YES ☒ NO ☐ Trench Feet Duct Bank Feet
CITY | DR. DIST. | COUNTY AIR | STATE RD | FAA
WMD | RR XING | COUNTY RD. | TRANSIT.
Telephone Request? YES ☒ NO ☐ CATV Request? YES ☐ NO ☐

DESIGNED BY M. RUIZ
DRAWN BY R. SEENARINE
DATE 08/08/12
MAP NO. V-0255

M/R CD
MIAMI BEACH
UNDERGROUND SYSTEM
V/O W 25 ST & LAKE AVE
MIAMI BEACH, FLORIDA

DWG NO. MBPP162
WR: 3085435 WS: D030-85-435

PLOT DATE: 8/23/2012 PLOT TIME: 9:26:22 AM CAD NAME: MRI

☐ INACCESSIBLE ☒ 13KV ☐ FUTURE 23KV ☐ 23KV ☒ SALT SPRAY ☐

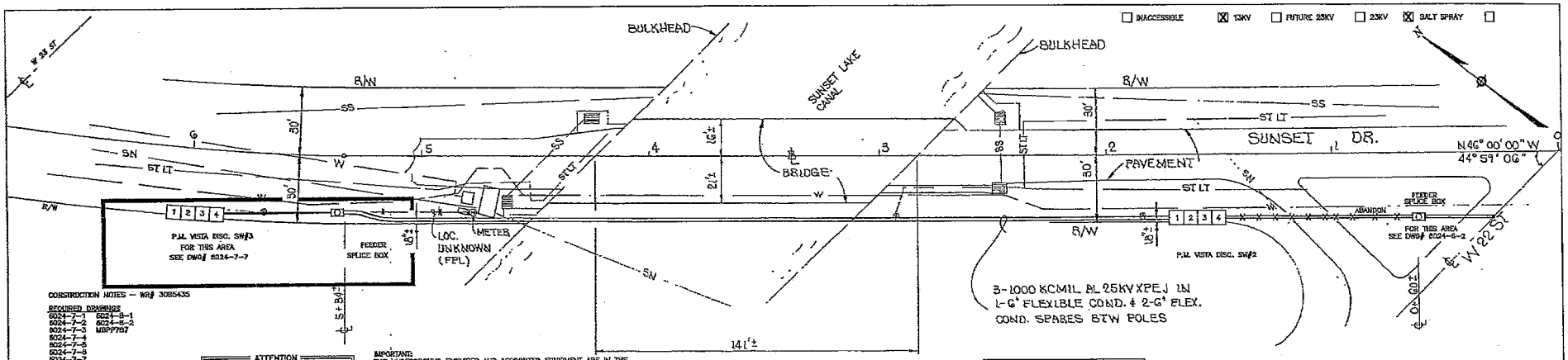

CONSTRUCTION NOTES – WR# 3085435

REQUIRED DRAWINGS
6024-7-1 6024-8-1
6024-7-2 6024-8-2
6024-7-3 MBPP787
6024-7-4
6024-7-5
6024-7-6
6024-7-7
6024-7-8
JS3085435-1(NOTES)
JS3085435-2

UTILITY CONTACT LIST
CALL SUNSHINE 1-800-432-4770

ATTENTION
ROW AGREEMENT

IMPORTANT:
THE UNDERGROUND FACILITIES AND ASSOCIATED EQUIPMENT ARE IN THE RIGHT OF WAY DUE TO SPECIAL REQUEST BY THE LOCAL GOVERNMENT AGENCY AND ARE COVERED BY SPECIAL AGREEMENT WITH THE LOCAL GOVERNMENT. SHOULD THE LOCAL GOVERNMENT OR OTHER RIGHT OF WAY REQUIRE FPL TO RELOCATE, ADJUST OR REARRANGE ANY OF THESE FACILITIES, AS THEY MAY EXIST INITIALLY OR LATER BE MODIFIED, UPGRADED, OR OTHERWISE ALTERED, THE LOCAL GOVERNMENT SHALL PROVIDE FPL WITH A SUBSTITUTE LOCATION, INCLUDING ANY EASEMENTS THAT MAY BE NECESSARY, AND PAY ANY COSTS FOR THE RELOCATION, ADJUSTMENT, OR REARRANGEMENT. THE LOCAL GOVERNMENT SHALL ALSO REIMBURSE FPL FOR ANY COSTS TO LOCATE, EXPOSE PROTECT OR SUPPORT THE FACILITIES, IN THE EVENT OF FUTURE CONSTRUCTION OR EXCAVATION IN CLOSE PROXIMITY TO THE FACILITIES. REQUEST A COPY OF THE RIGHT OF WAY AGREEMENT FROM DOC FILES/GO FOR FURTHER DETAILS.

Ground Rod Information		
Location	Feet of Ground Rod Installed	Resistance (Ohms)

The location and existence of any facilities may not be relied upon by the supplier in responding to a bid or in complying with any contract. Supplier is responsible for evaluating site conditions both above and below ground including underground facility locations.

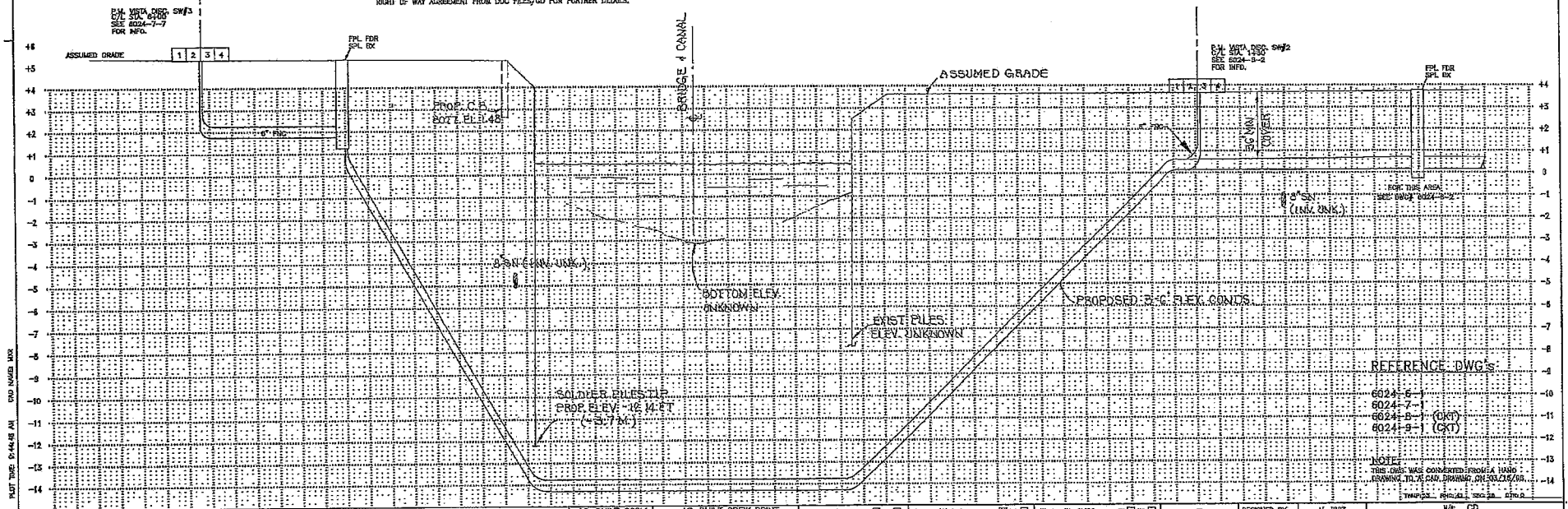

REFERENCE DWG'S:
6024-6-1
6024-7-1
6024-8-1 (CKT)
6024-9-1 (CKT)

NOTE:
THIS DWG. WAS CONVERTED FROM A HAND DRAWING TO AC CAD DRAWING ON 03/28/08.

ASSBLT	AUTH NO.	NO.	DATE	REVISION
	3085435	4	06/06/12	OH TO UG CONVERSION INSTALL VISTA CABINET 3 & 4 AT SUNSET ISLAND 3
	3085435	3	05/18/09	INST. FDR. PRIMARY, P.M.D.S.#1 & #2, AND TX'S, TO SVC SUNSET ISLAND 4
	3085435	2	05/18/09	INST. FDR. PRIMARY, P.M.D.S.#3, AND TX'S, TO SVC SUNSET ISLAND 3
	7224-04-883	1	12/09/98	MISC. CHANGES. ADDED SW#'S & REVISED CABLE IN CONDUIT
	7222-04-883	0	03/18/98	ORIGINAL DWG

AS-BUILT COPY
Engineer | Date | Foreman's Signature | Date
Job CERTIFIED COMPLETED as shown on this AS-BUILT print. Material changes shown on RDS.
Supervisor's Signature | Date
All required ground rods have been driven & verified to be within FPL standards. Values are shown at all locations.
Foreman's Signature | Date

AS-BUILT CREW PRINT

Easement? YES ☐ NO ☐
Tree Work? YES ☐ NO ☐
Map Posting? YES ☒ NO ☐
Staked by

Survey/Stake? YES ☒ NO ☐
Designer/Stake? YES ☐ NO ☐
Trench Feet
Work with SMO? YES ☐ NO ☐
CT/Special Mtr? YES ☐ NO ☐
Duct Bank Feet

PERMITS: CITY | DR. DIST. | COUNTY AIR | STATE RD | EAA | WMD | RR XING | COUNTY RD. | TRANSM.

Telephone Request? YES ☒ NO ☐ CATV Request? YES ☐ NO ☐

FPL

DESIGNED BY	M. RUIZ
DRAWN BY	S. SEENARINE
DATE	06/09/12
MAP NO.	V-0255

B 10 HORIZ. 20 40
D LD 20 VERT. 40

W/A: CD
MIAMI BEACH
UNDERGROUND SYSTEMS
BTWN W 22 ST & 23 ST ON SUNSET DR
MIAMI BEACH-FLORIDA

DWG NO. MBPP787
WR# 3085435 WR# D030-85-435

PLOT DATE: 5/25/2015 PLOT TIME: 10:44:46 AM CAD NAME: MXR

SPECIFICATIONS FOR UNDERGROUND CONDUIT INSTALLATION

1. Conduit, handhole, and transformer pad placement shall be in the easement provided and in accordance with the design drawings and field staking.

2. Use only FPL supplied conduit with FPL supplied bends. (Figure 1)

3. Glue all joints securely with FPL supplied glue. (Appendix A)

4. FPL conduit markers must be placed at all conduit ends. (Figure 1)

5. Primary conduit is to have a minimum of 36 inches of cover. Secondary conduit is to have a minimum of 24 inches of cover. (Figure 1). Secondary conduit may be placed at 36" depth when in the same trench as primary conduit.

6. All service and street light conduit is to have 24 – 30 inches of cover at property line. All future service stub-outs at transformer locations to be installed with 90's. Where primary, secondary, or street light conduit runs turn horizontally, 36 inch radius 90 degree bends are to be used.

7. Cap all ends of the conduit with FPL supplied end caps. Denote termination point of each conduit run on the capped end, (Appendix B). All conduit ends are to be terminated 1 – 2 feet above final grade except at transformer locations where conduit ends are to be terminated 3 inches above final grade. (Figure 3)

8. Install 1 #12 copper locate wire supplied by FPL in each trench per attached specs (Figure 4). All ends of the #12 copper locate wire must be exposed above grade, and secured with a tie wrap to a piece of stubbed up conduit for future locates. (Figure 4)

9. Conduits terminated at transformer locations to be installed with templates supplied by FPL per Figure 3A, 3B, or 3C according to the type of transformer being installed. (Consult your Service Planner).

10. Concrete transformer slabs provided by FPL are to be installed level on compacted fill at final grade and oriented as shown on the FPL design drawing(s) (Figure 3)

11. Conduits terminated at future secondary handhole locations to be installed per Figure 2. If secondary handholes are being installed at the time of conduit installation, install 45 degree bends as shown in Figure 1.

12. Primary splice handhole to be installed with electronic cable marker. (Figure 2A)

13. Install a continuous length of pull string in all conduit runs.

14. Backfill operations are to be done carefully with special attention given to utilizing clean fill, thereby assuring the elimination of rock and other scrap material to insure that the conduit will not be damaged or marking devices moved and proper compaction is achieved.

TESTING AND ACCEPTANCE GUIDELINES

Following notification of completed installation of underground conduits by a developer/contractor FPL will:

1. Randomly spot check the installation depth of conduits below grade at a minimum of 2 points between each primary termination point, (transformers, splice boxes & risers) noting the measured depth on the record drawing.

2. After confirming the correct routing and integrity of a conduit run, verify that the cable markers were installed and exposed conduit ends are plugged.

3. Confirm that a continuous length of pull string has been installed in all conduit runs and verify that all conduits runs terminate in the correct locations.

4. The final acceptance of the conduit installation will occur when FPL pulls the conductor and occupies the conduit.

TEMPLATE

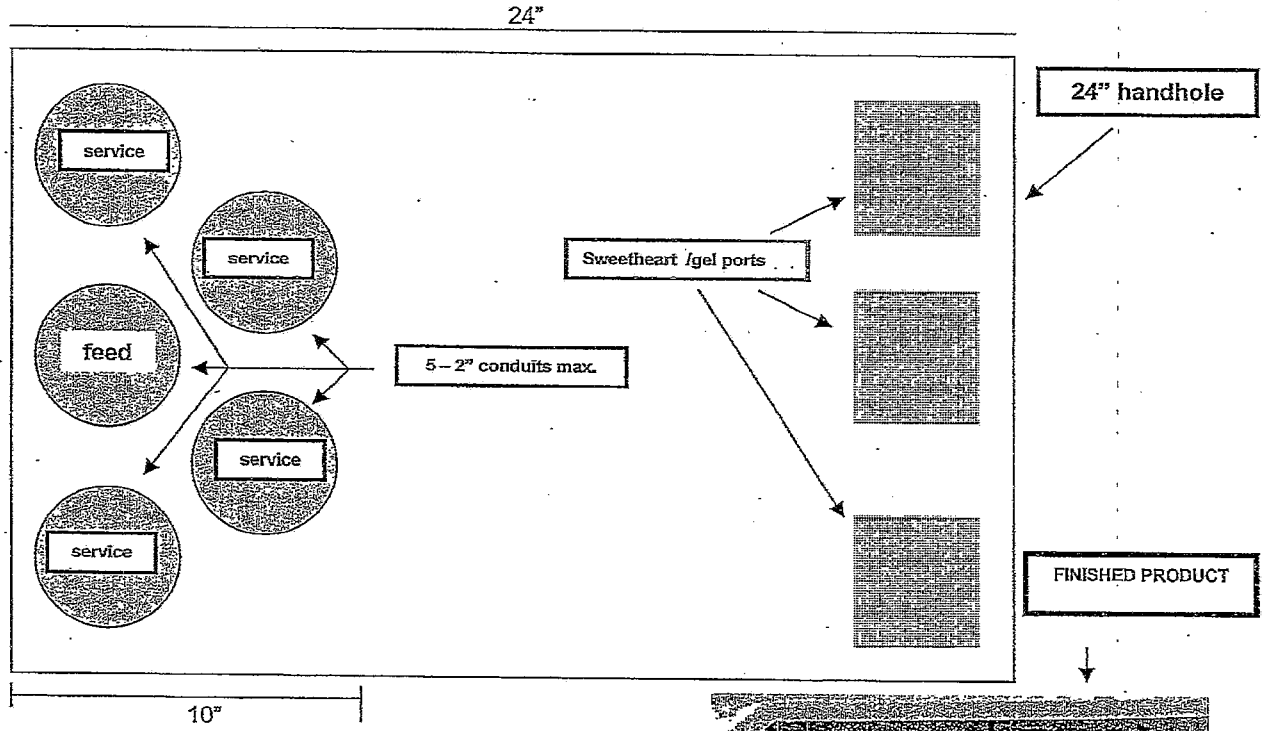

WHEN INSTALLING 2" CONDUITS UP TO 5 MAY BE PLACED IN A 24" HANDHOLE. Please install all conduits within 10" of one end of the handhole. This allows cables to drape across to the other end of handhole where the terminations will be placed such as sweetheart connectors or gel port connectors. When the wires are raised out of the handhole this will allow approximately 18" of wire above ground level making it easier for employees to work on in future situations.

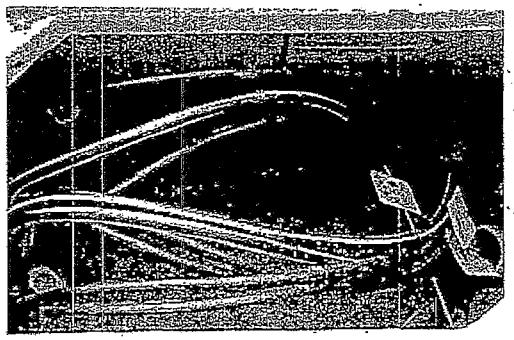

FIGURE 1

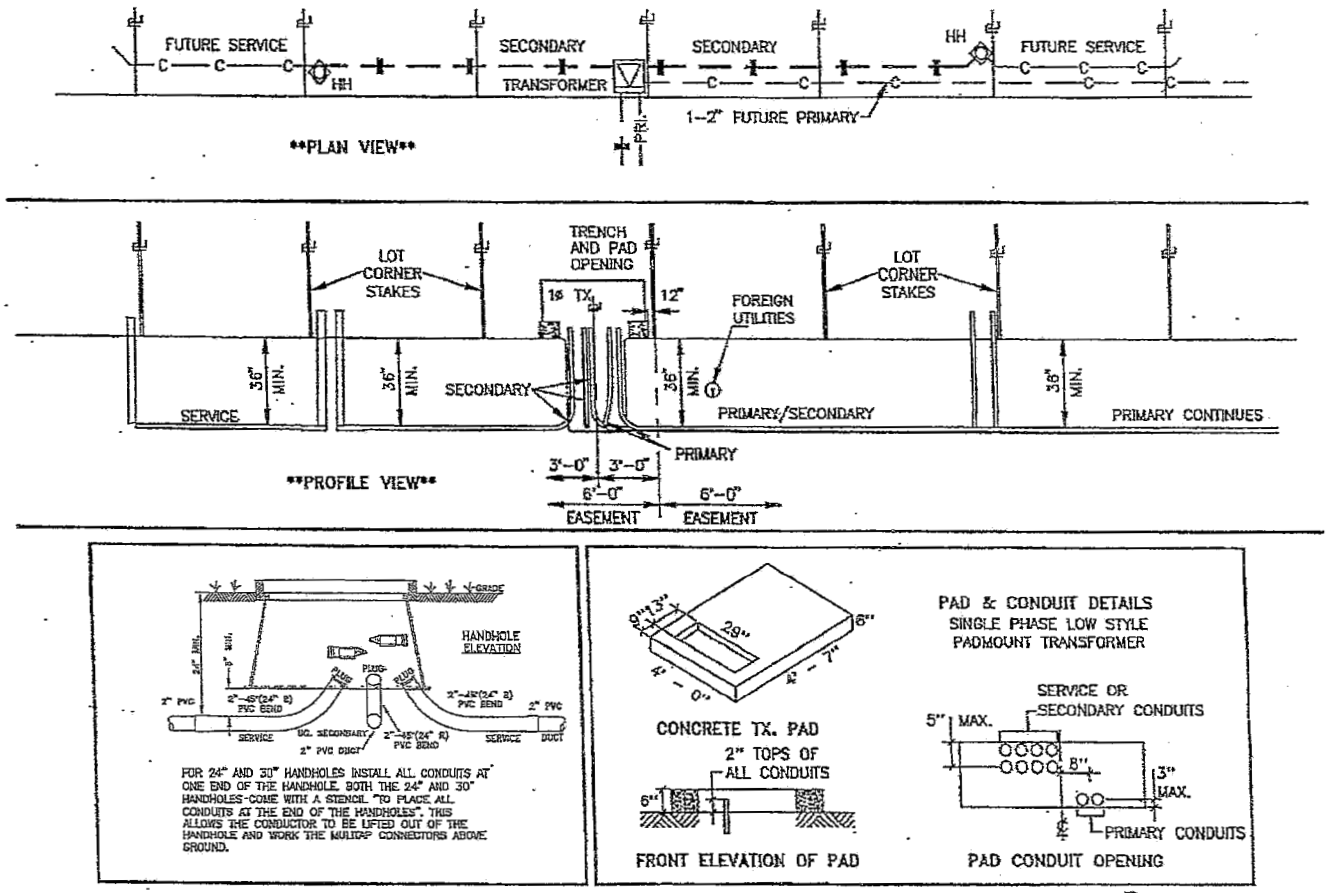

F P L

Note - Transformer location to be per specific design drawing, and may split lot lines in some cases.

FIGURE 2

TYPICAL SERVICE HANDHOLE INSTALLATION

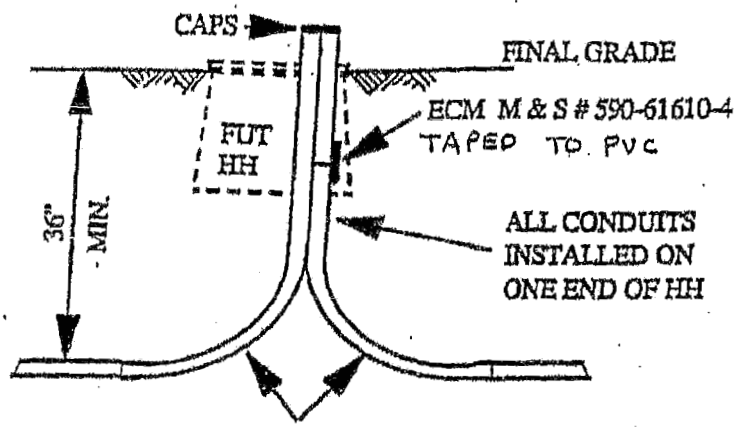

FIGURE 2A

48" PRIMARY SPLICE HANDHOLE

M & S # 161-12100-4

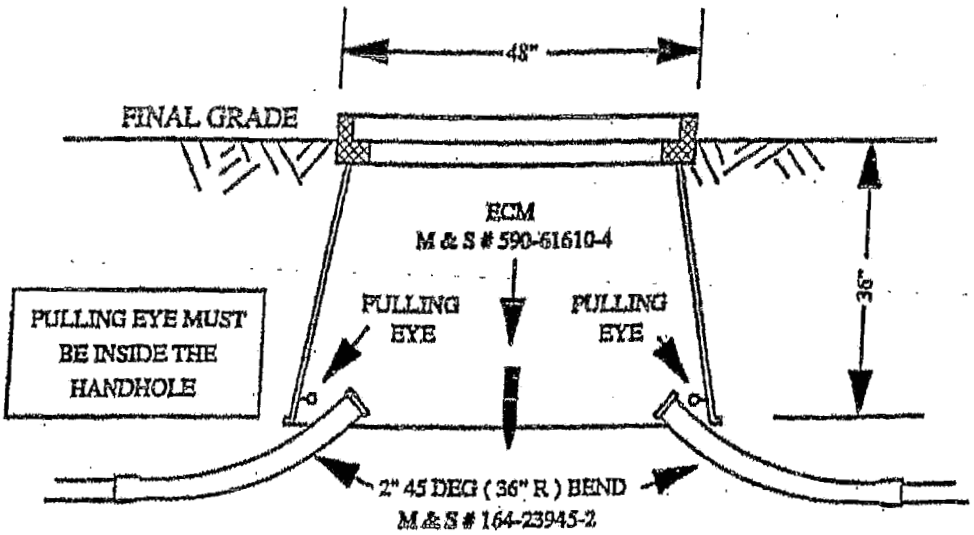

FIGURE 3

PAD & CONDUIT DETAILS

SINGLE PHASE LOW STYLE
PADMOUNT TRANSFORMER

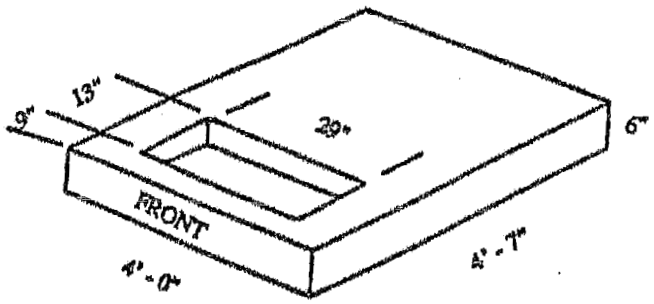

CONCRETE TRANSFORMER PAD
M & S # 162-24800-4

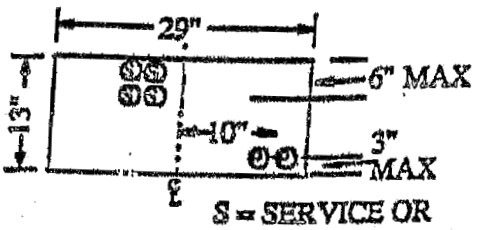

S = SERVICE OR SECONDARY

P = PRIMARY

PAD CONDUIT OPENING

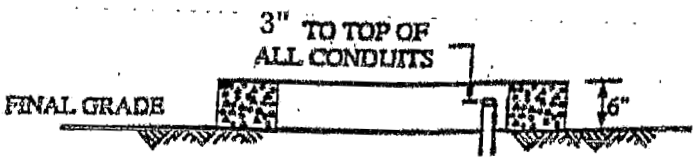

FRONT ELEVATION OF PAD

FIGURE 3A

ONE LOW STYLE & ONE REGULAR STYLE TRANSFORMER

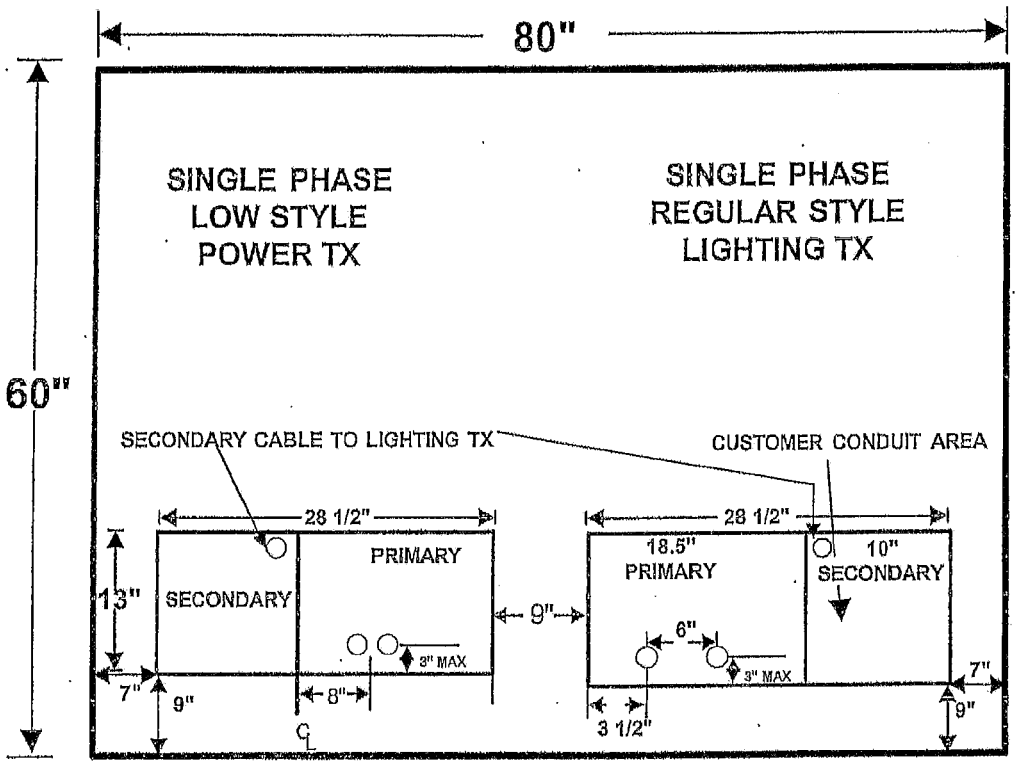

(FRONT OF PAD)

FIGURE 3B

SINGLE PHASE LOW STYLE TRANSFORMER

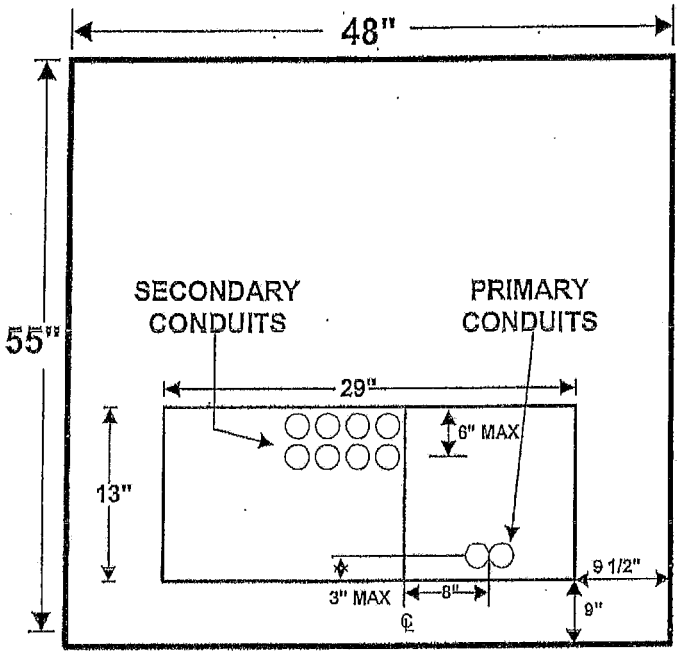

(FRONT OF PAD)

FIGURE 3C

TWO LOW STYLE TRANSFORMERS

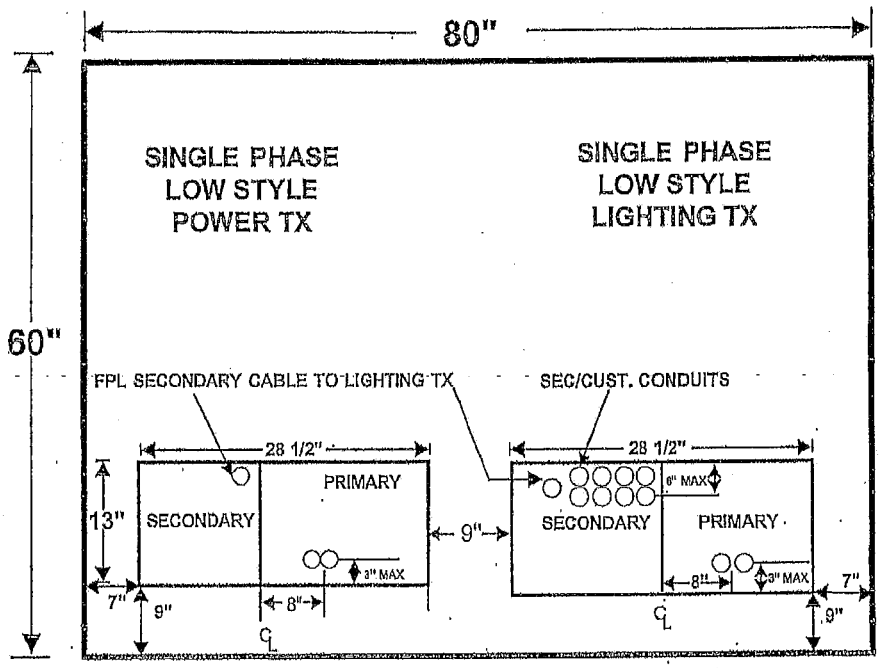

(FRONT OF PAD)

FIGURE 4

1 - #12C INSTALLATION

When installing conduit only (cable to be pulled later), a single #12 copper insulated wire is to be direct buried in every trench at the same depth as the conduits. The ends of the wire are to be terminated above ground at the conduit ends as shown. This wire will allow empty plastic conduits to be located with electronic equipment.

This method is not intended for cases where conduit is installed strictly for road crossings only. In these cases ECM markers should be used to mark the conduit ends.

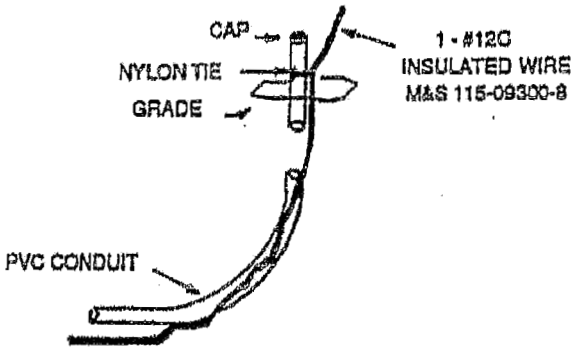

WHERE TO INSTALL #12C WIRE

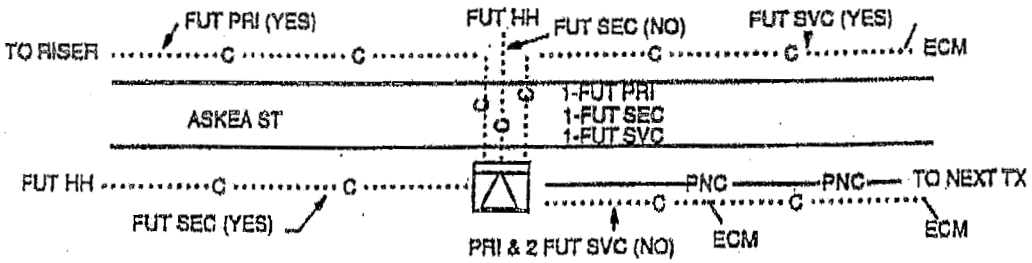

DRAWING SYMBOLS

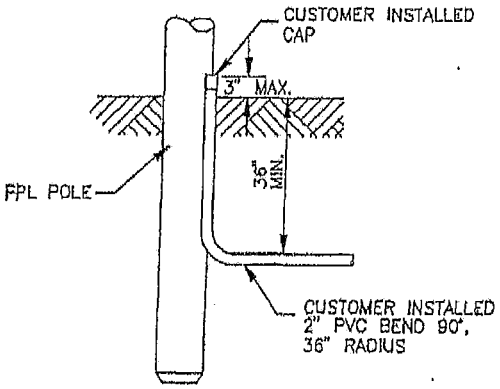

TYPICAL PVC CONDUIT BEND AT RISER POLE INSTALLATION

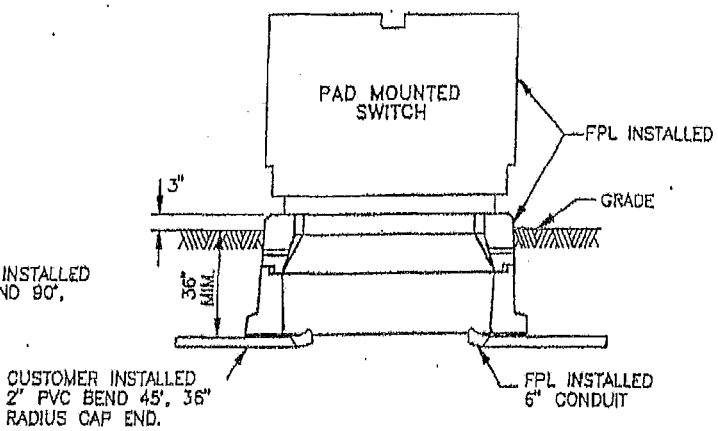

TYPICAL CONDUIT ENTRANCES TO PAD MOUNTED SWITCH

SYMBOLS

	EXISTING	PROPOSED
CONDUCTORS – PRIMARY FPL OWNED, IN CONDUIT, WITH CONDUCTOR SIZE, METAL, RATED VOLTAGE INSULATION AND NEUTRAL INDICATED.	PNC	PNC
CONDUCTORS – SECONDARY – STREET LIGHT FPL OWNED, IN CONDUIT, WITH CONDUCTOR SIZE, METAL AND INSULATION INDICATED (HM/HD TPX SHOWN).	1/0A	4/0A
SERVICE LATERALS THREE-WIRE SECONDARY SERVICE. FPL OWNED IN CONDUIT WITH CONDUCTOR SIZE, METAL, INSULATION AND JACKET INDICATED.	3–2C RN	1/0A TPX
EMPTY CONDUIT	C	C C
PADMOUNTED TRANSFORMERS PADMOUNTED TRANSFORMER, 1ø, WITH kVA RATING (FRONT, OR TERMINAL CHAMBER, IS SMALL RECTANGLE AT RIGHT END OF SYMBOL. PRIMARY PHASE INDICATED) TRANSFORMER STYLE SHOWN AS FOLLOWS: (RS) – REGULAR SIZE – 42" + HIGH, (DF) – DEAD FRONT – 32 " + HIGH, (LS) – LOW STYLE – 24" + HIGH.	B 15	B 15
STRUCTURES		
ELECTRONIC CABLE MARKER AND OR SPLICE PIT (BURIED)		
SERVICE HANDHOLE		

FPL

APPENDIX A

UN-27.0.0	RECOMMENDED PRACTICES FOR FIELD JOINING OF PVC CONDUIT (USING CLEAR SOLVENT CEMENT) AND PVC CONDUIT INSTALLATION	UN-27.0.0

FIELD JOINING

1. EXAMINE EACH LENGTH OF CONDUIT AND ENSURE THERE ARE NO INTERIOR OR EXTERIOR IMPERFECTIONS, CRACKS, ETC. REMOVE ALL FOREIGN MATERIAL FROM INSIDE CONDUIT.

2. USING A HACKSAW, FINE TOOTH WOOD SAW, OR NYLON STRING, CUT PIPE SQUARE (IF REQUIRED). REMOVE ANY BURRS AND BEVEL ANY SHARP EDGES. WIPE DRY WITH A CLEAN, DRY CLOTH.

3. APPLY CEMENT (M & S #522-14100-7) UNIFORMLY ON INSIDE OF BELL OR FITTING. APPLY UNIFORM COAT OF CEMENT ONTO CONDUIT END. DO NOT POUR, SPLASH, OR GLOB CEMENT ON!

4. IMMEDIATELY INSERT THE CONDUIT INTO THE BELL END OF FITTING ALL THE WAY TO THE INSIDE SHOULDER. ENSURE SNUG FIT AND TURN CONDUIT 1/4 TURN TO DISTRIBUTE CEMENT EVENLY.

5. HOLD JOINT FOR APPROXIMATELY ONE MINUTE TO ALLOW CEMENT TO BEGIN SETTING. WIPE OFF EXCESS CEMENT.
(NOTE: MANUFACTURER RECOMMENDATIONS ARE TO ALLOW FOR A MINIMUM OF 10 MINUTES OF DRYING TIME PRIOR TO ANY BACKFILLING. WEATHER CONDITIONS MAY VARY THIS SETTING TIME.)

FIELD INSTALLATION

1. LAY CONDUIT RUN INTO TRENCH. DO NOT KICK, THROW OR SLAM IT IN!

2. SURROUNDING TRENCH BACKFILL MUST BE FREE OF LARGE OR SHARP ROCKS, CINDERS OR OTHER DEBRIS WHICH WILL DAMAGE CONDUITS DURING BACKFILL OPERATION OR SUBSEQUENT COMPACTION.

3. IN CORAL ROCK AREAS, IT IS RECOMMENDED THAT HAND BACKFILLING FOR THE FIRST 3 TO 6 INCHES BE PERFORMED.

4. INSTALL PLUGS OR END BELLS ON ALL VACANT DUCTS, AS REQUIRED.

5. THE FINISHED CONDUIT RUN SHALL BE RODDED IN AN APPROVED MANNER (I.E. WINCH LINE, MANDREL, ETC.) TO VERIFY CONTINUITY AND CLEANLINESS. (NOTE: NO CONDUIT RUN SHALL BE ACCEPTED AS PROPERLY INSTALLED UNLESS FREE PASSAGE IS OBTAINED AND VERIFIED BY FPL SUPERVISION.)

NO.	DATE	REVISION	ORIG.	DRAWN	APPR.

FPL
OH & UG DISTRIBUTION SYSTEM STANDARDS

ORIGINATOR: OM DRAWN BY: BQ

DATE: 9-30-94 APPROVED: R. J. SALESKY NO SCALE
SUPERVISOR, OH/UG PRODUCT SUPPORT SERVICES

APPENDIX B

UV-12.0.0	IDENTIFICATION OF UNDERGROUND CABLES AND VACANT CONDUITS	UV-12.0.0

GENERAL ALL UNDERGROUND CIRCUITS SHOULD BE IDENTIFIED WHERE APPLICABLE AS FOLLOWS:

- FEEDER NUMBER
- SWITCH NUMBER
- PHASE
- CONDUCTOR SIZE, METAL, TYPE INSULATION AND VOLTAGE RATE (IF NOT SAME AS OPERATING VOLTAGE)
- SOURCE OR DIRECTION OF FEED
- OWNERSHIP
- ADDRESS OF BUILDING SERVED
- TLM NUMBER
- DATE OF FAILURE ON SECTION OF CABLE (DIRECT BURIED ONLY)
- ANY UNUSUAL CONDITIONS, I.E. CABLE IN CONDUIT, PARTIALLY IN CONDUIT, DIRECT BURIED, ETC.

ALL CIRCUITS AND VACANT CONDUITS SHOULD BE APPROPRIATELY IDENTIFIED AT EACH TERMINAL OR SWITCHING POINT AND ALL INTERMEDIATE LOCATIONS SUCH AS VAULTS, MANHOLES, PAD MOUNTED TRANSFORMERS, OR HANDHOLES. WHEN THE CIRCUIT OR VACANT CONDUIT IS OWNED BY OTHER THAN FLORIDA POWER & LIGHT COMPANY, SHOW "CUST" ON APPROPRIATE TAG. IF NECESSARY INFORMATION CANNOT BE SHOWN ON ONE TAG, USE ADDITIONAL TAGS.

INFORMATION WILL BE PLACED ON APPROVED TAGS SHOWN BELOW IN THE MANNER DESCRIBED FOR THE PARTICULAR CONDITION.

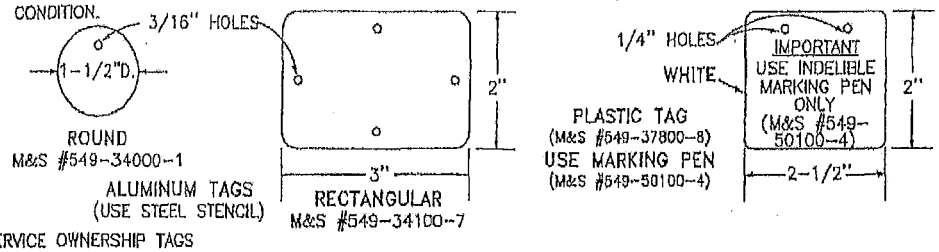

SERVICE OWNERSHIP TAGS
PLACE INSIDE METER CAN. USE TIE WRAP TO ATTACH TAG TO CONDUCTORS. PRINT ADDRESS USING MARKING PEN (M&S #549-50100-4)

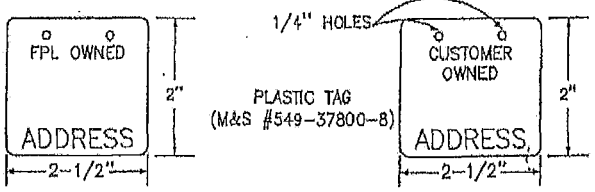

UNDERGROUND DUCT & MANHOLE SYSTEMS
USE ALUMINUM TAGS, AFFIXED TO CABLES WITH #12C-TW ON ALL CIRCUITS IN UNDERGROUND SYSTEMS, SUCH AS SUBWAY VAULTS, MANHOLES, RISER POLES, ETC. ROUND ALUMINUM TAGS ARE FOR FEEDER NUMBER AND PHASE IDENTIFICATION. RECTANGULAR ALUMINUM TAGS ARE USED FOR ALL OTHER IDENTIFICATION PURPOSES FOR EXAMPLE, ON ISOLATED NEUTRAL CONDUCTORS OF PILC CABLES, ETC.

DIRECT BURIED AND CABLE IN CONDUIT SYSTEMS
USE ALUMINUM TAGS FOR CUSTOMER I.D. AS INDICATED ABOVE FOR LOCATIONS THAT WILL BE SUBJECTED TO SUNLIGHT. USE PLASTIC TAGS FOR URD CABLE TERMINATION TAGGING AND AT OTHER LOCATIONS SUCH AS PADMOUNTED TRANSFORMERS AND HANDHOLES. ALLOW 10 SECONDS MINIMUM DRYING TIME TO PREVENT SMEARING. FASTEN PLASTIC TAG TO CABLE WITH TY-RAP (M&S #534-25000-1).

EXAMPLE OF MARKING SECONDARY CABLES

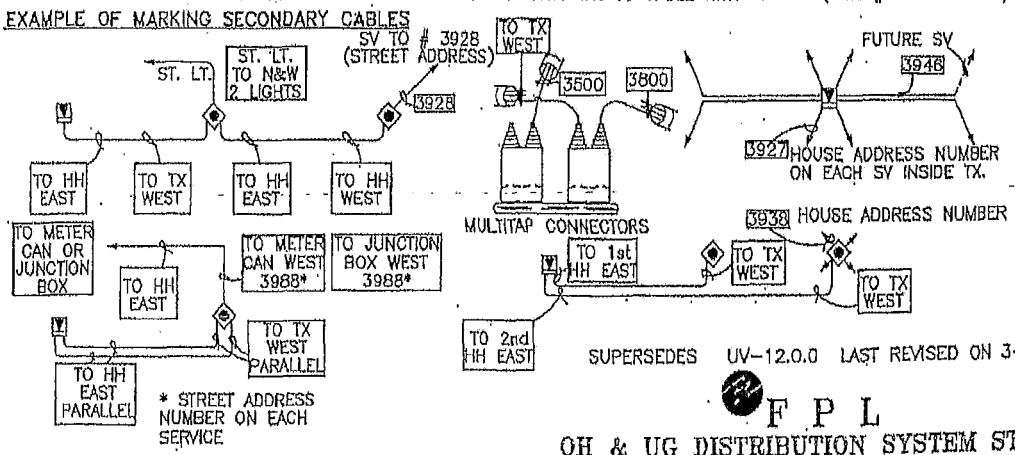

SUPERSEDES UV-12.0.0 LAST REVISED ON 3-15-91

F P L
OH & UG DISTRIBUTION SYSTEM STANDARDS

NO.	DATE	REVISION	ORIG.	DRAWN	APPR.
0	9-30-94	CHANGED PAGE FORMAT AND REVISED NOTES AND DIMENSIONS	RJO	MLG	RJS

ORIGINATOR: RJO DRAWN BY: MLG
DATE: 9-30-94 APPROVED: R.J. SALESKY
SUPERVISOR, OH/UG PRODUCT SUPPORT SERVICES
NO SCALE

C-32.0.2	TYPICAL INSTALLATION OF 15 OR 25 KV S & C TYPE PME DEAD FRONT THREE PHASE PAD MOUNTED SWITCHGEAR	C-32.0.2

C

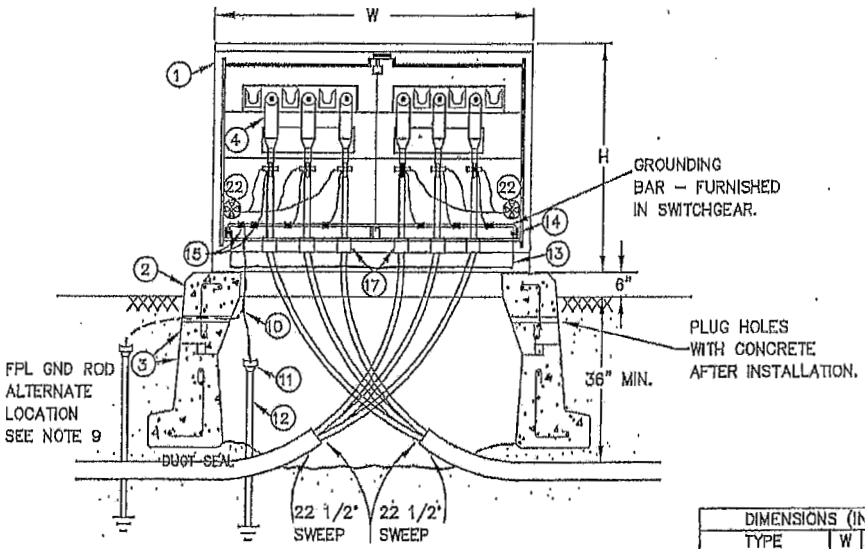

600 AMP FEEDER SIDE
SECTION A-A

DIMENSIONS (INCHES)					WEIGHT
TYPE		W	D	H	IN LBS.*
15 KV	PME-9	75	67	50	2300
	PME-11	75	73	50	2350
	PME-10	75	73	50	2400
25 KV	PME-9	84	82	56	2900
	PME-11	84	88 1/2	56	2950
	PME-10	84	88 1/2	56	3000

* ADD 150 LBS. FOR STAINLESS STEEL.

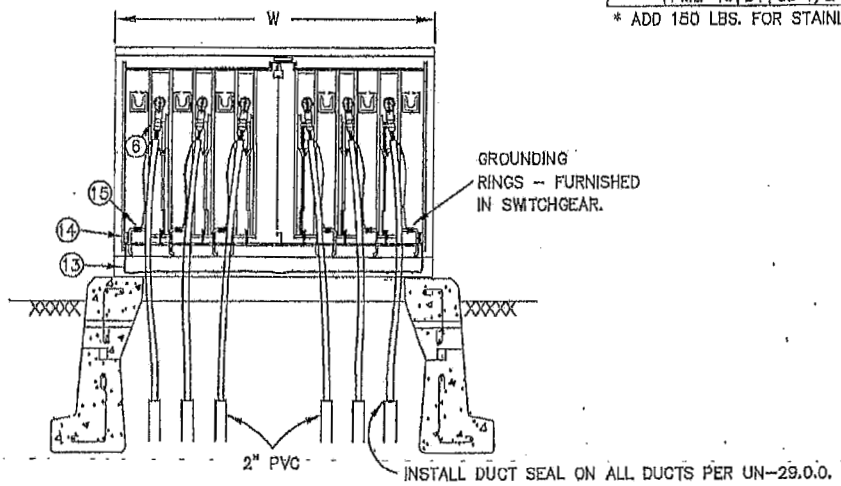

FUSE SIDE (PME-9 SHOWN)
SECTION B-B

F P L
OH & UG DISTRIBUTION SYSTEM STANDARDS

NO.	DATE	REVISION	ORIG.	DRAWN	APPR.
2	7/21/01	UPDATE DRAWING ADDED PME-10 AND CHANGED SOME TEXT	RAP	JES	JJM
1	9/30/94	ADDED ARROW TO INCLUDE TOP CHAMBER SECTION ③	RJO	BAQ	RJS

ORIGINATOR: RWS
DRAWN BY: JRG
DATE: 6/30/93
APPROVED: R.J. SALESKY
DIRECTOR, DISTRIBUTION ENGINEERING AND OPERATIONS SERVICES
NO SCALE

C-32.0.3	TYPICAL INSTALLATION OF 15 OR 25KV S&C TYPE PME DEAD FRONT THREE PHASE PAD MOUNTED SWITCHGEAR	C-32.0.3

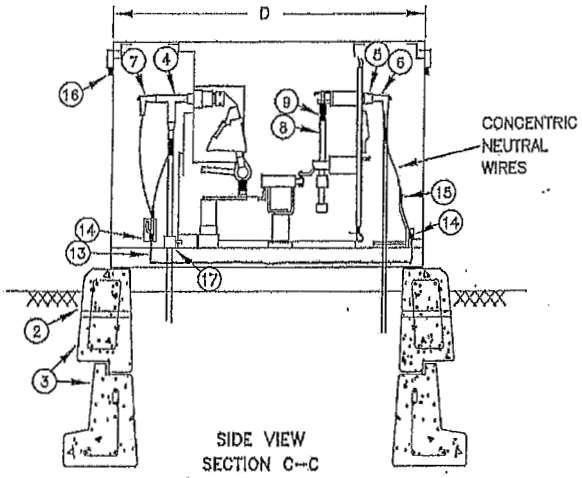

NOTES:

1. WHEN CHANGING OUT A LIVE FRONT PAD MOUNTED SWITCH TO A DEAD FRONT PAD MOUNTED SWITCH, IT IS IMPORTANT TO ENSURE THAT THE REPLACEMENT DEAD FRONT SWITCH HAS THE SIX INCH ADAPTER BASE SPACER. THE NEW SWITCH MUST BE INSTALLED WITH THE SAME ORIENTATION AS THE OLD SWITCH IN ORDER TO ENSURE THAT THE ADAPTER BASE SPACER MATCHES THE NEW SWITCH CORRECTLY TO THE ORDER, SMALLER SIZED PAD. NOTE: IT IS NO LONGER REQUIRED TO CHANGE OUT THE TOP PAD PORTITION OF THE CHAMBER. USE 600 AMP REPLACEMENT ELBOWS (M & S # 163-50256-7), AS SHOWN IN DOS UH-40.0.0, FOR THE FEEDER CABLES AND 200 AMP REPAIR ELBOWS (VARIOUS M & S NUMBERS), AS SHOWN IN UH-78.0.0 FOR THE LOOP SIDE PRIMARY CABLES.
2. CABLES MUST NOT BE IN CONTACT WITH THE EDGE OF CHAMBER FOOTING. TOP VIEW SHOWS CORRECT ROUTING FOR FEEDER CABLES THAT IS NECESSARY TO PROVIDE FOR CABLE MOVEMENT.
3. PRIMARY CABLES MUST BE ABLE TO REACH PARKING LOCATIONS.
4. ALLOW SUFFICIENT LENGTH OF CONCENTRIC NEUTRAL TO REACH GROUNDING BARS AND PERMIT FREE MOVEMENT OF ELBOWS.
5. BRASS STUDS FURNISHED WITH THE 600 AMP ELBOW KITS MUST BE INSTALLED AND TIGHTENED SECURELY (55 FT. LBS.) IN THE 600 AMP BUSHINGS. THE SHORT THREADED END OF THE STUD GOES INTO THE BUSHING. SEE UH-41.0.1 AND UH-41.0.2 FOR 600 AMP ELBOW DETAILS.
6. INSTALL 800 AMP 3ø FAULT INDICATORS ON EACH SET OF FEEDER CABLES. SEE UV-14.0.0, UV-14.0.1, UV-14.0.2.
7. LOOP SIDE PRIMARY CABLES (#1/0A) MUST GO THRU CABLE GUIDES TO AVOID CONFLICT WITH FUSE DOOR WHEN IT IS ROTATED TO OPEN.
8. CABLE SPOOLS (2 1/2") SHOULD BE USED ON THE FEEDER CABLE TO CORRECTLY POSITION THE CABLES FOR EASIER INSTALLATION OF THE BOLT-ON ELBOW TERMINATORS ON TO THE 600 AMP BUSHINGS. THE 600 AMP ELBOWS MUST BE BE INSTALLED PERFECTLY STRAIGHT (VERTICALLY AND HORIZONTALLY) ONTO THE 600 AMP BUSHINGS TO PROPERLY ENGAGE THE THREADS. THE SPOOLS ARE TO BE BOLTED TO THE BOTTOM FLANGE OF THE SWITCH COMPARTMENT WALL WITH 3/8" X 1 1/2" BOLTS THRU EXISTING HOLES PROVIDED BY THE SWITCH MANUFACTURER.
9. MAKE CERTAIN OF CABLE LOCATIONS BEFORE DRIVING GROUND RODS. WHEN INSTALLING GROUND RODS IN ALTERNATE LOCATION, INSURE THAT BOTH THE TOP OF THE ROD AND THE #4C WIRE ARE AT LEAST 3" BELOW GRADE AND ARE COVERED. EXISTING 3/4" HOLES SHOULD BE USED IF AT LEAST 3" BELOW GRADE.
10. APPLY CAULKING COMPOUND TO SEAM BETWEEN PAD MOUNTED SWITCH AND PAD CHAMBER.
11. UNUSED FUSE POSITIONS MUST HAVE BUSHINGS & PROTECTIVE CAPS INSTALLED. UNUSED FEEDER POSITIONS MUST HAVE 600 AMP PROTECTIVE CAPS (M&S #163-64500-7).
12. AFTER THE PADMOUNTED SWITCH IS INSTALLED, THE LIFTING BRACKETS MUST BE REMOVED AND STORED INSIDE THE CABINET OR TURNED DOWN SO THAT THEY DO NOT PROTRUDE ABOVE THE TOP OF THE CABINET.
13. ENSURE THAT THE "CAUTION" LABEL (M&S #548-58010-4) IS INSTALLED ON EACH SIDE OF THE SWITCH HAVING ACCESS TO THE HIGH VOLTAGE SWITCH AND/OR THE HIGH VOLTAGE FUSE COMPARTMENTS PER DOS Z-35.0.0.
14. SEAL DUCTS PER UN-29.0.0.

SUPERSEDES C-32.0.3 LAST REVISED ON 9-30-94

F P L

OH & UG DISTRIBUTION SYSTEM STANDARDS

NO.	DATE	REVISION	ORIG.	DRAWN	APPR.
3	8/20/02	UPDATE DWG. (NOTE 1)	CEA	JES	JJM
2	8/13/01	UPDATE DWG. (NOTES 10, 12, 13, & 14)	CEA	JES	JJM
1	8/09/96	ADDITION TO NOTE 11	PMG	RAS	JJM

ORIGINATOR: PMG DRAWN BY: RAS

DATE: 9/30/94 APPROVED: J.J. MCEVOY NO SCALE

SUPERVISOR, OH/UG PRODUCT SUPPORT SERVICES

C-32.0.4	TYPICAL INSTALLATION OF 15 OR 25KV S&C TYPE PME DEAD FRONT THREE PHASE PAD MOUNTED SWITCHGEAR	C-32.0.4

C

MATERIAL LIST

ITEM	DESCRIPTION	QUANTITY	M&S NO.
1	15KV SWITCHGEAR: PME-9 (2-THREE PHASE FEEDER POSITIONS AND 6 FUSE POSITIONS	1	STANDARD 270-67400-7 STAINLESS STEEL 270-67401-5
	15KV SWITCHGEAR: PME-11 (3-THREE PHASE FEEDER POSITIONS AND 3 FUSE POSITIONS	1	STANDARD 270-67900-9 STAINLESS STEEL 270-67901-7
	15KV SWITCHGEAR: PME-10 (4-THREE PHASE FEEDER POSITIONS AND NO FUSE POSITIONS	1	STANDARD 270-683-000 STAINLESS STEEL 270-683-050
	25KV SWITCHGEAR: PME-9 (2-THREE PHASE FEEDER POSITIONS AND 6 FUSE POSITIONS	1	STANDARD 270-67200-4 STAINLESS STEEL 270-67201-2
	25KV SWITCHGEAR: PME-11 (3-THREE PHASE FEEDER POSITIONS AND 3 FUSE POSITIONS	1	STANDARD 270-68100-3 STAINLESS STEEL 270-68101-1
	25KV SWITCHGEAR: PME-10 (4-THREE PHASE FEEDER POSITIONS AND NO FUSE POSITIONS	1	STANDARD 270-684-000 STAINLESS STEEL 270-684-050
2	PAD (TOP SECTION ONLY) FOR REPLACING LF WITH DF — FOR 15KV / FOR 25KV	1	162-12203-5 162-12205-1
3	PAD & CABLE CHAMBER (TOP & BOTTOM SECT.) — FOR 15KV / FOR 25KV	1	162-12201-9 162-12202-7
4	DEAD FRONT TERMINATOR, 1000 KCMIL AL. 15KV / 25KV	VARIES	163-63900-7
5	LOADBREAK BUSHING, 200 AMP 15KV / 25KV	VARIES	163-86100-1 163-86400-1
6	ELBOW TERMINATOR, 1/0 AL 15KV / 25KV	VARIES	163-88700-7 163-80200-1
7	PROTECTIVE CAP 200 AMP (15KV SWITCHES ONLY)	VARIES	163-02200-0
	ELBOW SURGE ARRESTER (25KV SWITCHES ONLY)	VARIES	334-01500-5
8	SME-4Z FUSE HOLDERS 15KV / 25KV	VARIES	531-56150-1 531-56310-5
9	FUSES: REFILL UNITS FOR SME-4Z, SM-4Z&SML-4Z FUSE HOLDERS 15KV: 20 AMP 531-38700-5; 30 AMP 531-38800-1; 50 AMP 531-38900-8; 65 AMP 531-39500-8; 80 AMP 531-39501-6; 100 AMP 531-39600-4; 125 AMP 531-39800-7; 150 AMP 531-40200-4; 175 AMP 531-40300-1; 200 AMP 531-39000-6 25KV: 10 AMP 531-32700-2; 15 AMP 531-32800-9; 20 AMP 531-32900-5; 30 AMP 531-33000-3; 40 AMP 531-33100-0; 50 AMP 531-33200-6; 65 AMP 531-33300-2; 80 AMP 531-33400-9; 100 AMP 531-33500-5; 125 AMP 531-33700-8; 150 AMP 531-33800-4; 175 AMP 531-33900-1; 200 AMP 531-34000-9		NOTE: THE FUSE REFILLS ARE THE SAME AS THOSE USED IN LIVEFRONT SWITCHES
10	WIRE #4C SDB	6	112-30900-0
11	CONNECTOR, GROUND ROD, CLAMP TYPE	1	120-03610-6
12	COPPERWELD GROUND RODS AS REQUIRED GROUND ROD COUPLINGS	VARIES	130-61400-5 130-40510-4
13	#4/00 CABLE, 600V	27	110-10106-1
14	CONNECTOR #4/0 COPPER CABLE TO FLAT	5	120-87100-5
15	CONNECTOR, COPPER TO COPPER, BOLTED — PME-9 / PME-11 / PME-10	19 22 25	102-80000-2
16	LOCK STANDARD PADLOCK, SMALL — PME-9 / PME-11 / PME-10	4 5 6	546-24601-1
17	CABLE SPOOL, 2 1/2" — PME-9 / PME-11 / PME-10	6 9 12	16D-30600-7
18	BOLT, 3/8" X 1 1/2" (FOR SPOOLS)	SAME AS SPOOLS	161-47900-2
19	NUT, 3/8" (FOR SPOOLS)	SAME AS SPOOLS	161-45000-4
20	WASHER FLAT 3/8" (FOR SPOOLS)	SAME AS SPOOLS	145-35900-6
21	LOCKWASHER, 3/8" (FOR SPOOLS)	SAME AS SPOOLS	161-52400-8
22	FAULT INDICATOR, 800 AMP, 3 PHASE — PME-9 / PME-11 / PME-10	2 3 4	163-29700-9

REPLACEMENT PARTS FOR SWITCHES
600 AMP BUSHINGS 15KV 274-00200-3
25KV 274-00300-0
200 AMP BUSHING WELLS 15KV 274-00220-8
25KV 274-00320-4

SUPERSEDE C-32.0.4 LAST REVISED ON 9-30-94

FPL
OH & UG DISTRIBUTION SYSTEM STANDARDS

ORIGINATOR: PMG DRAWN BY: RAS

DATE: 9/30/94 APPROVED: J.J. MCEVOY
SUPERVISOR, OH/UG PRODUCT SUPPORT SERVICES

NO SCALE

NO.	DATE	REVISION	ORIG.	DRAWN	APPR.
2	06/06/01	ADDED PME-10 SWITCH	OEA	JES	JJM
1	8/09/96	ADDITION TO ITEM 12	PMG	RAS	JJM

J-4.0.2	TYPICAL INSTALLATION OF 25 KV S & C DEAD FRONT SWITCHGEAR AND THREE PHASE PAD-MOUNTED CAPACITOR BANK	J-4.0.2

NOTES:

1. INSTALL 92" X 92" PRECAST PAD (M & S 162-25100-5)
2. DRIVE GROUND RODS & ATTACH #2 CU GROUND TO GROUNDING LUGS.
3. INSTALL URD CAPACITOR BANK (M & S 223-38800-1) ON PAD.
4. INSTALL ROTATABLE FEED-THRU BUSHING 25KV (M & S 163-25000-2) ON EACH BUSHING.
5. INSTALL 200 AMP ELBOWS ON ROTATABLE FEED-THRU BUSHINGS.
6. INSTALL 18KV ELBOW ARRESTERS (M & S 334-01500-5) ON ROTATABLE FEED-THRU BUSHINGS.

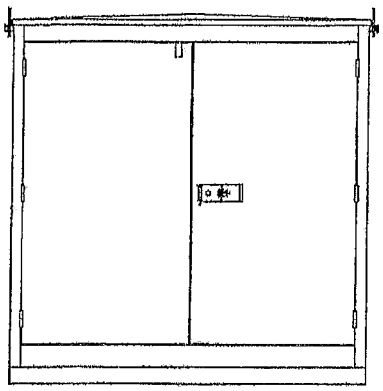

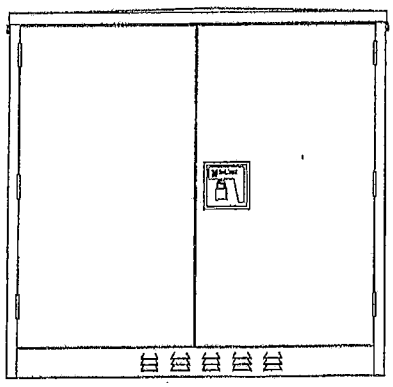

CAPACITOR CABINET

SWITCH CABINET

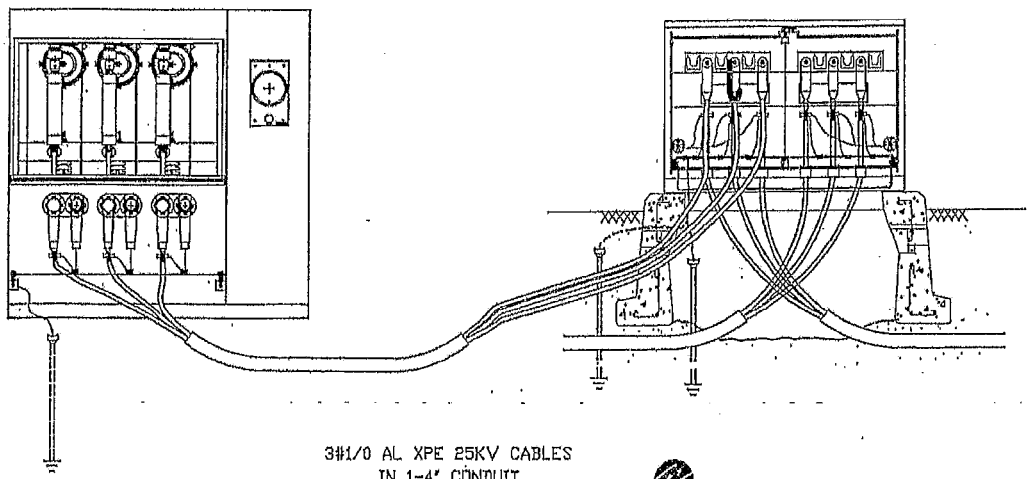

3#1/0 AL XPE 25KV CABLES
IN 1-4" CONDUIT
MAXIMUM OF 100 FEET

F P L

OH & UG DISTRIBUTION SYSTEM STANDARDS

ORIGINATOR: LFV

DRAWN BY: J. SHOUP

DATE: 07/26/01 APPROVED: J.J. MCEVOY
SUPERVISOR, OH/UG PRODUCT SUPPORT SERVICES

NO SCALE

NO.	DATE	REVISION	ORIG.	DRAWN	APPR.

J

**** NOTICE****

- CALL SUNSHINE 1-800-432-4770 48HOURS BEFORE YOU DIG FOR UNDERGROUND LOCATIONS.
- NOTIFY FPL REP. FOR INSPECTION OF TRENCH DEPTH & PVC INSTALLATION PRIOR TO BACKFILLING TRENCH.

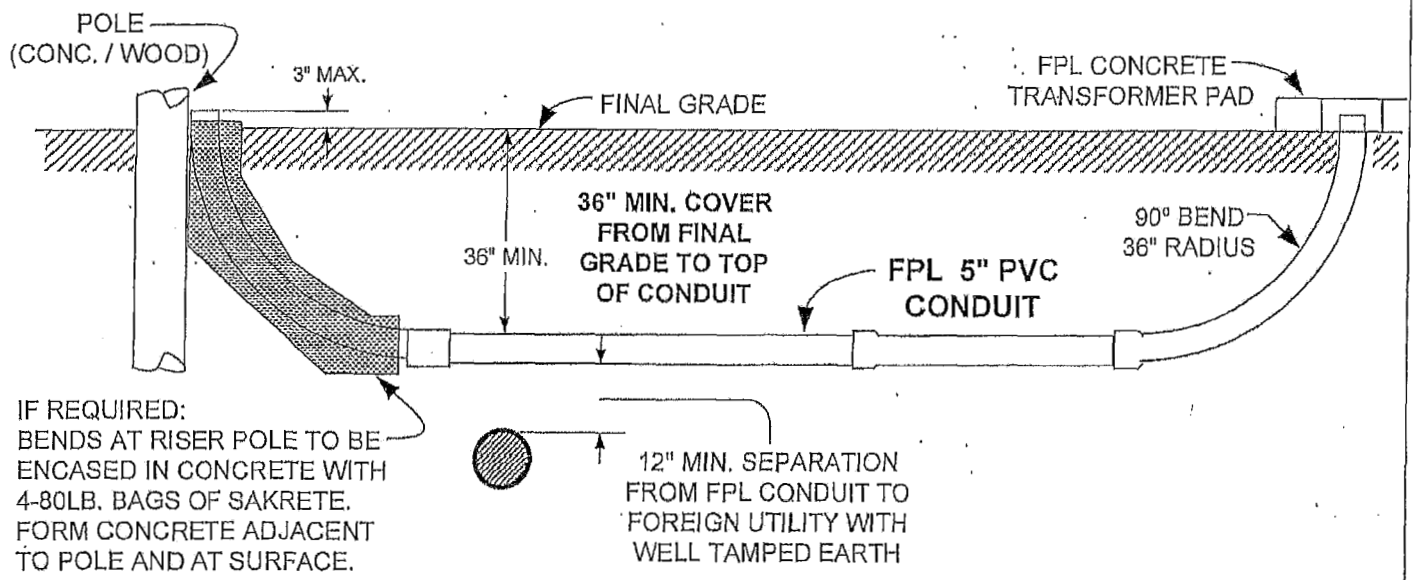

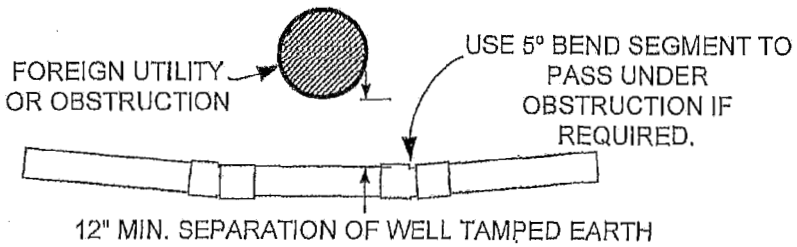

FPL CONDUIT CROSSING UNDER A FOREIGN UTILITY

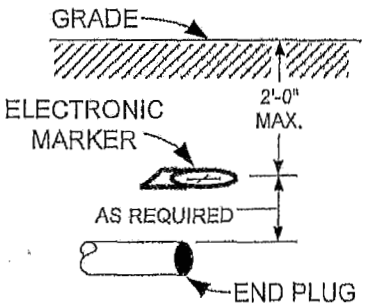

DUCT END MARKING
(IF REQUIRED)

NOTES:

- BACK-FILL WITHIN 4" OF THE CONDUIT TO BE FREE OF MATERIAL THAT MAY DAMAGE CONDUIT SYSTEM (BOARDS, ROCKS LARGER THAN 1" IN DIAMETER, DEBRIS, ETC.)
- IF COMPACTION OF TRENCH ROUTE IS REQUIRED FOR PAVING, ETC. BEGIN MACHINE COMPACTION 6" MINIMUM ABOVE CONDUIT.
- WHERE 36" OF COVER CANNOT BE MAINTAINED, 30" OF COVER WILL BE ALLOWED WITH 3" OF CONCRETE ENCASEMENT AROUND THE CONDUIT. (N.E.S.C. RULE FOR PRIMARY VOLTAGES)
- INSTALL A CONTINUOUS LENGTH OF PULL STRING IN ALL CONDUIT RUNS.

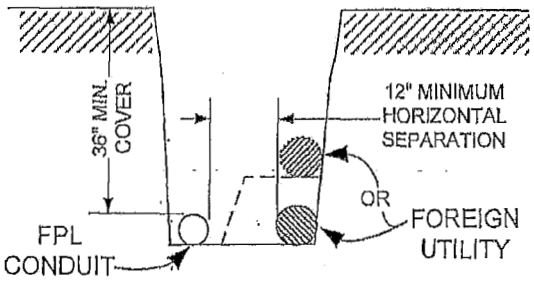

INSTALLATION OF FPL CONDUIT PARALLEL WITH - OR - IN A SHARED TRENCH WITH A FOREIGN UTILITY.

MATERIAL LIST 5" PVC SCH 40 CONDUIT	
20' LENGTH (BELLED END)	164-33800-1
90° BEND 36" RADIUS	164-25250-5
90° BEND 48" RADIUS	164-25200-9
45° BEND 48" RADIUS	164-61400-8
5° BEND SEGMENT	164-56100-1
22.5° SWEEP 12'-6" RADIUS	164-13000-1
STRAIGHT COUPLING	164-44900-7
REPAIR SLEEVE 6' LONG	164-47530-0
END PLUG	164-53500-1
ELECTRONIC MARKER	590-61601-5

FPL SUPPLIED 5" PVC CONDUIT

TYPICAL CUSTOMER INSTALLATION DETAILS

(PORTIONS OF UN-6, UN-15,CONC. & PAD DETAILS)

****** NOTICE******

- CALL SUNSHINE 1-800-432-4770 48HOURS BEFORE YOU DIG FOR UNDERGROUND LOCATIONS.
- NOTIFY FPL REP. FOR INSPECTION OF TRENCH DEPTH & PVC INSTALLATION PRIOR TO BACKFILLING TRENCH.

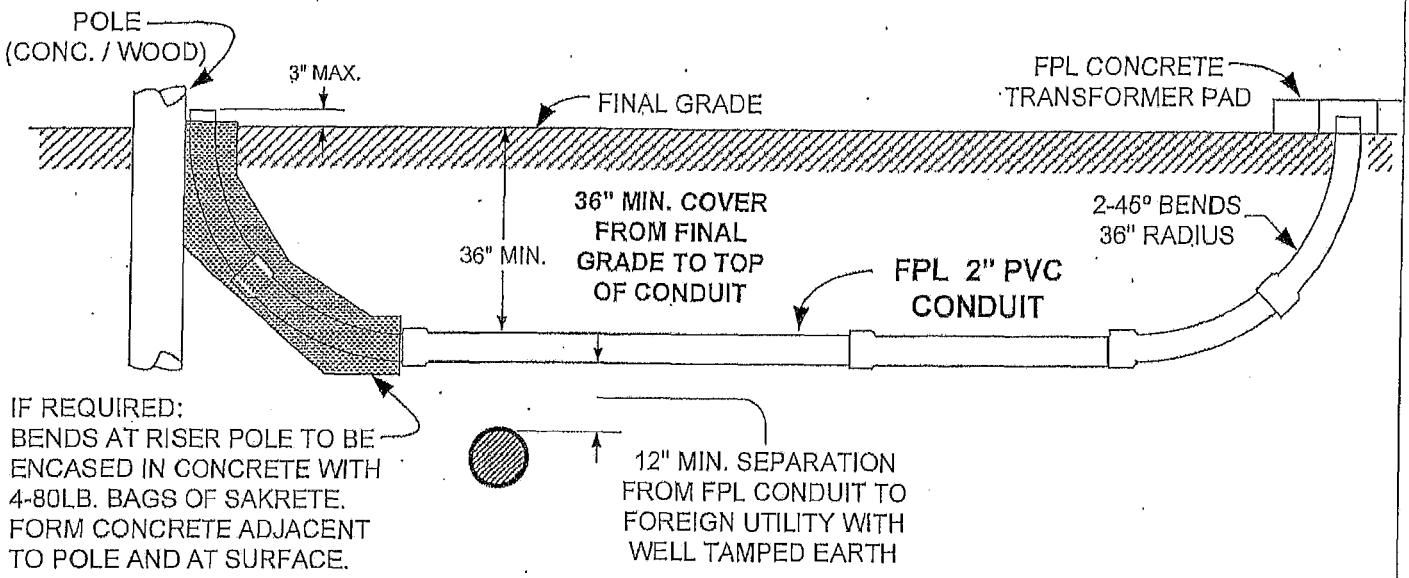

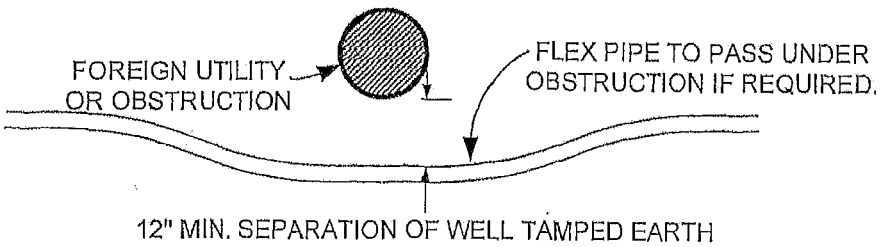

FPL CONDUIT CROSSING UNDER A FOREIGN UTILITY

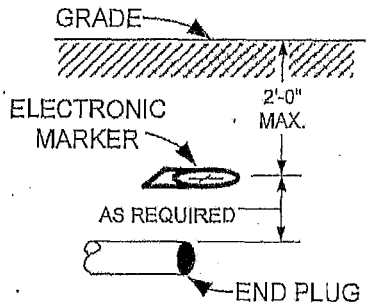

DUCT END MARKING
(IF REQUIRED)

NOTES:

- BACK-FILL WITHIN 4" OF THE CONDUIT TO BE FREE OF MATERIAL THAT MAY DAMAGE CONDUIT SYSTEM (BOARDS, ROCKS LARGER THAN 1" IN DIAMETER, DEBRIS, ETC.)
- IF COMPACTION OF TRENCH ROUTE IS REQUIRED FOR PAVING, ETC. BEGIN MACHINE COMPACTION 6" MINIMUM ABOVE CONDUIT.
- WHERE 36" OF COVER CANNOT BE MAINTAINED, 30" OF COVER WILL BE ALLOWED WITH 3" OF CONCRETE ENCASEMENT AROUND THE CONDUIT. (N.E.S.C. RULE FOR PRIMARY VOLTAGES)
- INSTALL A CONTINUOUS LENGTH OF PULL STRING IN ALL CONDUIT RUNS.

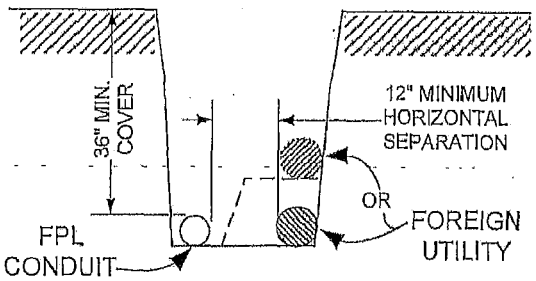

INSTALLATION OF FPL CONDUIT
PARALLEL WITH - OR - IN A SHARED TRENCH
WITH A FOREIGN UTILITY.

MATERIAL LIST 2" PVC SCH 40 CONDUIT	
20' LENGTH (BELLED END)	164-33100-6
90° BEND 24" RADIUS	164-23800-6
45° BEND 36" RADIUS	164-23945-2
45° BEND 24" RADIUS	164-23900-2
STRAIGHT COUPLING	164-47000-6
REPAIR SLEEVE 4" LONG	164-47520-2
END PLUG	164-54800-5
ELECTRONIC MARKER	590-61601-5

FPL SUPPLIED 2" PVC CONDUIT

TYPICAL CUSTOMER INSTALLATION DETAILS

(PORTIONS OF UN-6, UN-15, CONC.& PAD DETAILS)

UN-18.0.0	FEEDER SPLICE BOX	UN-18.0.0

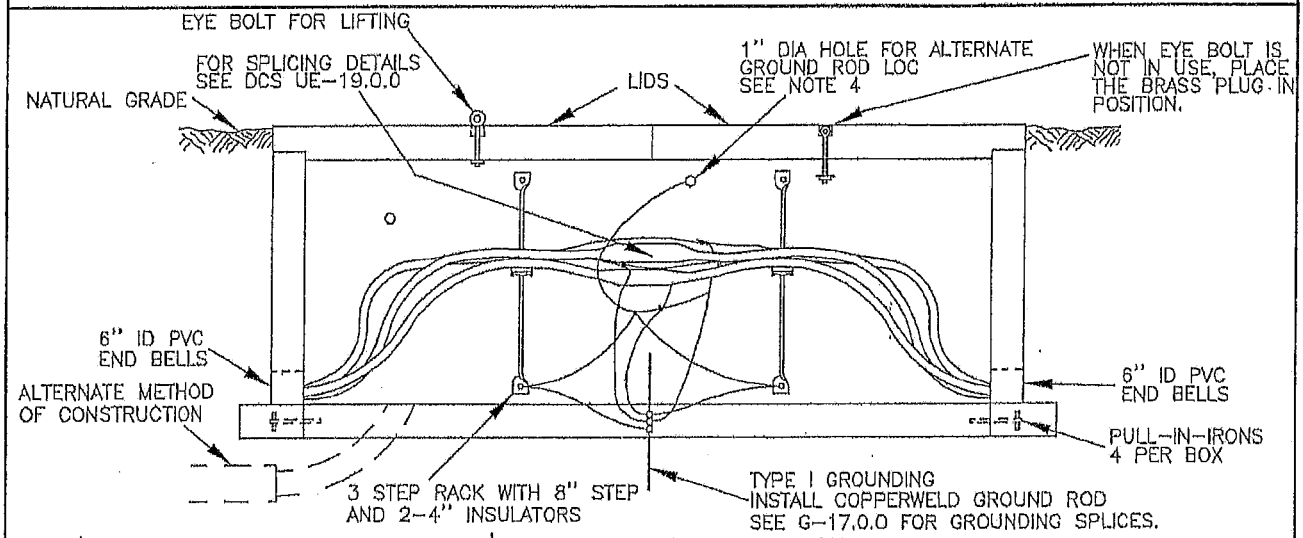

TYPICAL WALL SECTION

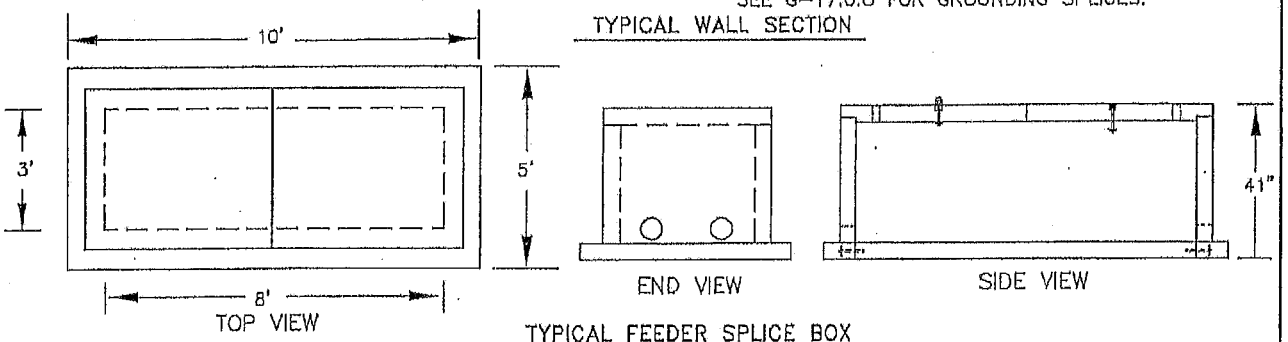

TYPICAL FEEDER SPLICE BOX

M&S NUMBER	DESCRIPTION
162-240-003	CONCRETE FEEDER SPLICE BOX & LIDS.
162-241-000	CONCRETE FEEDER SPLICE BOX & LIDS COMES WITH SPECIAL BRUSHED SIDEWALK FINISH LIDS AND FLUSH INSERTS SUITABLE FOR PEDESTRIAN TRAFFIC.
162-242-203	POLYMER CONCRETE FEEDER SPLICE BOX. TO BE INSTALLED ONLY IN NON ACCESSIBLE AREAS, NOT TO BE SUBJECTED TO ANY VEHICULAR TRAFFIC SUCH AS STREETS, PARKING LOTS OR DRIVEWAYS.

NOTES:

1. LEAVE SUFFICIENT EXPOSED GROUND ROD TO INSTALL 6 EACH #4/0-#2 CONNECTORS M&S #120-118-005.
2. GROUND ALL SPLICES PER DISTRIBUTION STANDARD G-17.0.0.
3. GROUND CABLE RACKS.
4. EACH SPLICE BOX IS SUPPLIED WITH 2-1" DIA HOLE FOR ALTERNATE GROUND ROD LOCATION. MAKE ALL GROUNDING CONNECTIONS INSIDE THE BOX. RUN SUFFICIENT AMOUNT OF 4/0 TO MAKE CONNECTION TO ALT. GROUND ROD LOCATION. RESEAL 1" DIA HOLE WITH AQUASEAL.
5. DISTRIBUTION SPLICE BOX AND LIDS ARE DESIGNED FOR H-20 VEHICLE LOADING. (FULL TRAFFIC LOADING)
6. WEIGHT OF SPLICE BOX (W/O LIDS) =6700 LBS. DIMENSIONS ARE 10' X 5' X 41" DEEP
7. WEIGHT OF EACH LID=1400 LBS. TWO LIDS REQUIRED. M & S # FOR LID ONLY 162-240-011.
8. URD FEEDER CABLE SPLICES MUST BE BONDED TO DRIVEN GROUNDS.
9. REFER TO UE-19.1.1 & UE-19.1.2 FOR SPLICE ASSEMBLY. A WATER TIGHT SEAL MUST BE MADE WHERE INSULATED
10. CONDUCTORS CONNECT TO SYSTEM NEUTRAL. SEE G-17.0.0
11. THE MAXIMUM PERMISSIBLE IMPEDENCE TO SYSTEM NEUTRAL FOR A DRIVEN GROUND IS 25 OHMS.
12. AS SHOWN ABOVE, THE PVC MAY ENTER UNDERNEATH THE SPLICE BOX BY USING A 45 DEGREE SWEEP. SEAL CONDUIT WITH DUCT SEAL.
13. IN AREAS SUBJECT TO WATER INTRUSION, INSTALL A SUFFICIENT AMOUNT OF PEAROOK 1/4"-3/4" SIZE ROCK TO ALLOW FOR THE PERCOLATION OF THE WATER.
14. IF FEEDER SPLICE BOX IS TO BE INSTALLED IN A SIDEWALK. A SEPERATION WILL BE NEEDED BETWEEN THE CONCRETE AND THE LIDS.
15. REFER TO UX-233.0.1

FPL

OH & UG DISTRIBUTION SYSTEM STANDARDS

UN

ORIGINATOR: RAP DRAWN BY: J. SHOUP

NO.	DATE	REVISION	ORIG.	DRAWN	APPR.
0	8/16/05	ORIGINAL DRAWING	RJO	ELS	JJM

DATE: 8/27/99 APPROVED: J. McEVOY
SUPERVISOR, OH/UG PRODUCT SUPPORT SERVICES

NO SCALE

UX-108	CONCRETE_FOUNDATION URD_CAPACITOR_BANK	UX-108

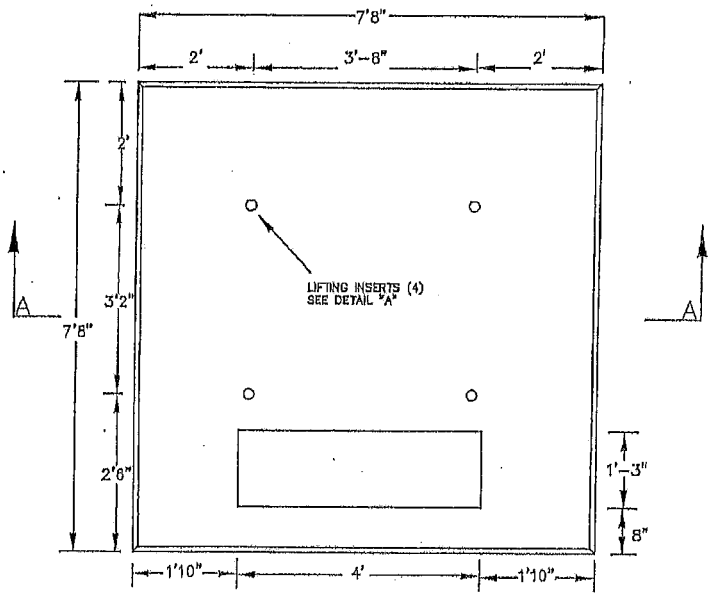

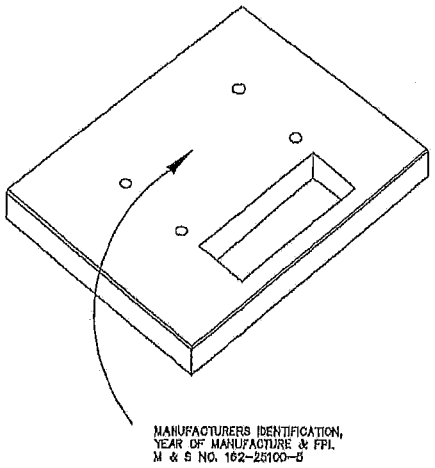

NOTES:

1. TOP SURFACE SHALL BE A SMOOTH PLANE. THE MAX. ALLOWABLE VARIATION IN HEIGHT BETWEEN ANY TWO POINTS ON THIS SURFACE IS 0.125".

2. 5000 PSI TEST CONCRETE.

3. MANUFACTURERS IDENTIFICATION, YEAR OF MANUFACTURE & FPL CO. M&S NO. 162-25100-5 TO BE CAST IN TOP SURFACE OF PAD NEAR CENTER (REQUIRED WHEN PRECAST).

4. SUPERIOR THREADED INSERT, 5/8" WITH PLUG, ELECTRO-GALVANIZED, 4 REQUIRED.

5. REINFORCING RODS TO BE WELDED AT ALL INTERSECTIONS

WEIGHT	3230 LB
CU. FT.	26.9
CU. YDS.	1.0
MAX LOAD	2000 LB

REINFORCED STEEL

S4074	14X7'-4"
S4055	3X5'-5"
S4010	4X1'-0"

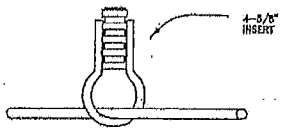

DETAIL A

F P L

OH & UG DISTRIBUTION SYSTEM STANDARDS

ORIGINATOR:BOB BENN

DRAWN BY:D.OKONEWSKI

DATE:12/29/97

APPROVED: J.J. MCEVOY
SUPERVISOR, OH/UG PRODUCT SUPPORT SERVICES

NO SCALE

NO.	DATE	REVISION	ORIG.	DRAWN	APPR.

UX-113

CONCRETE FOUNDATION FOR S&C 3Ø PADMOUNTED SWITCH

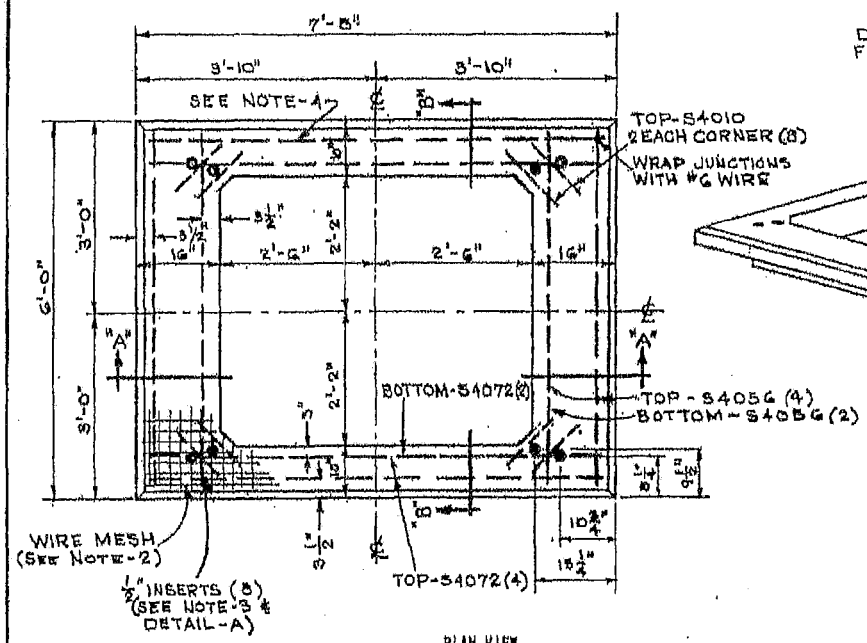

PLAN VIEW

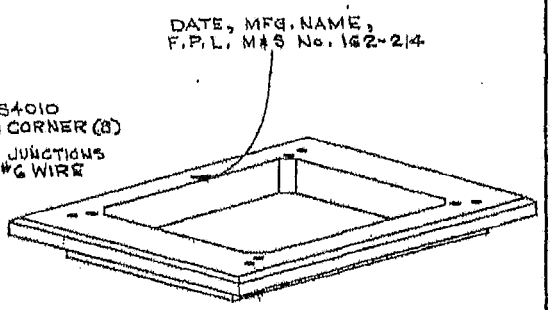

WEIGHT - 2745 LB. CU. FT. - 18.3 CU. YD. - 0.68
1245 - KILOGRAMS 519 - LITERS 0.519 - CU. METERS

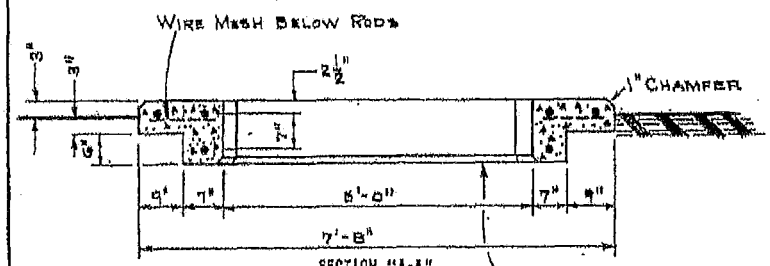

SECTION "A-A"

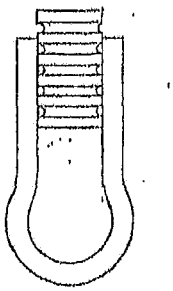

DETAIL-"A"

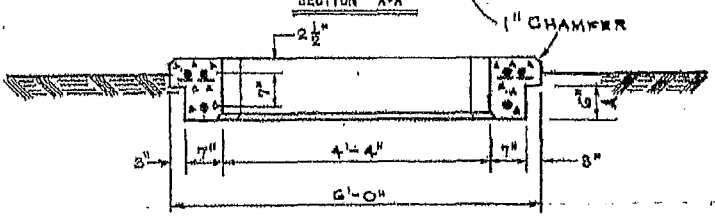

SECTION "B-B"

1. Top surface to be smooth and level. Surface irregularities are not acceptable.
2. 4 x 4 No.4 Welded Wire Mesh Reinforcing to stop 2" from Sides and Opening of Foundation.
3. Superior Threaded Inserts, 1/2" with Plug, Electro-Galv.,4 Required.(See Detail A)
4. #4 Reinforcing Rod as shown.
5. 4000 Lb. Test Concrete.
6. For use with S & C Switches, M & S Nos. 270-853,270-854,270-855 & 270-890.
7. Manufacturers identification, Year of Manufacture, and FPL Co. M & S Number to be cast in top surface of pad near center of pad. (This required when precast.)

APPROVED: J. F. Allen
CHIEF ENGINEER

DRAWN	V. Bennett	
CHECKED	Sid Zils	
CORRECT	V. Bennett	

NO.	DATE	REVISION	BY	CH	CON	APP
1	2-8-72	CORRECTED DIMENSIONS	HAM	GVA	MW	KBM

STANDARDS
UNDERGROUND DISTRIBUTION SYSTEM
FLORIDA POWER & LIGHT COMPANY

DATE 12-28-71 NO SCALE

FORM 303 (L) REV. 8/64

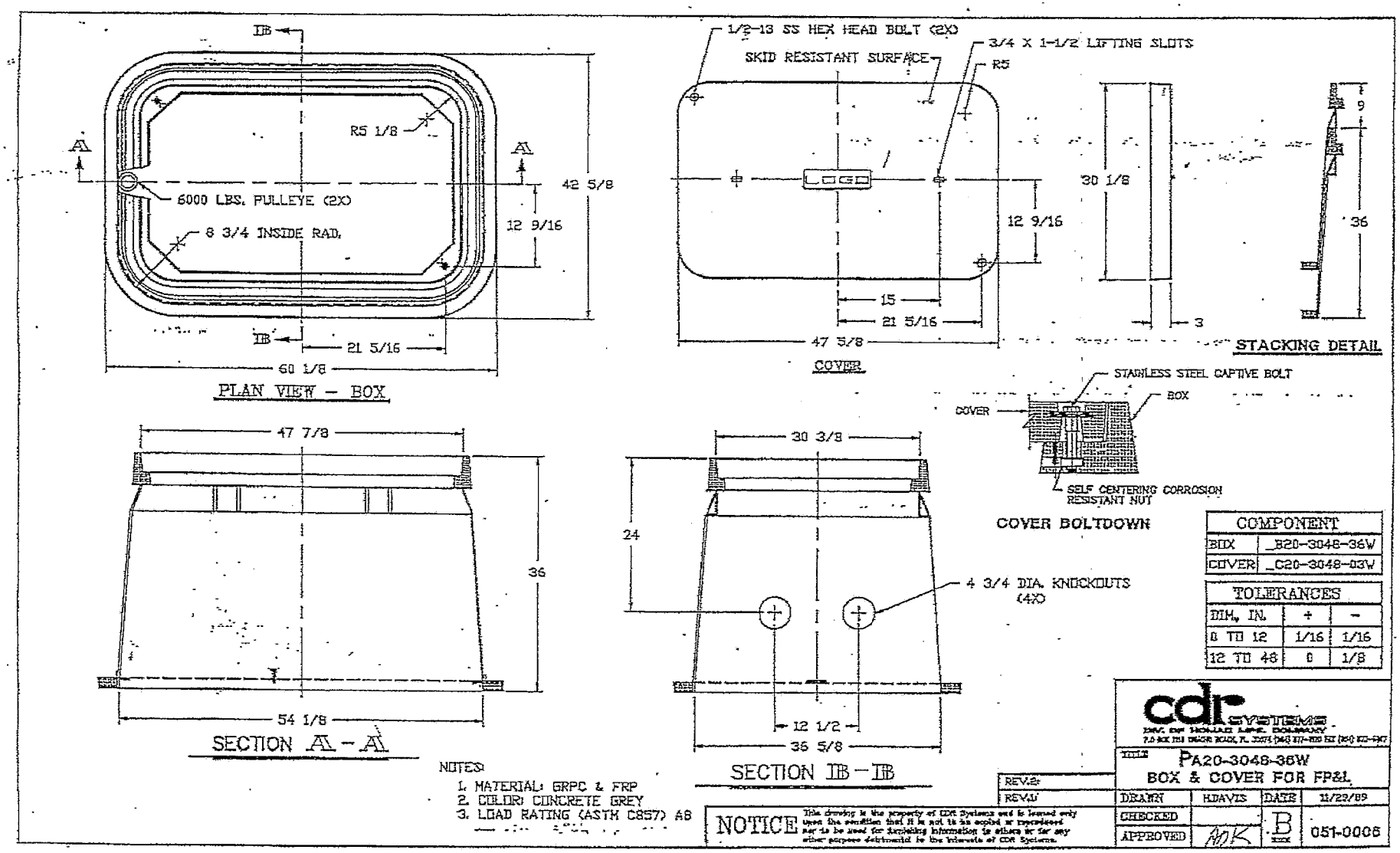

COMPONENT	
BOX	_B20-3048-36W
COVER	_C20-3048-03W

TOLERANCES		
DIM, IN.	+	-
8 TO 12	1/16	1/16
12 TO 48	0	1/8

C-46.0.0	TYPICAL INSTALLATION OF 25KV S&C VISTA THREE PHASE SWITCH FOR USE IN 13KV OR 23KV BELOW GRADE AND PAD MOUNTED APPLICATIONS	C-46.0.0

TYPICAL BUSHING POSITION ON VISTA SWITCH MODEL 422 SHOWN
F=FEEDER L=LATERAL

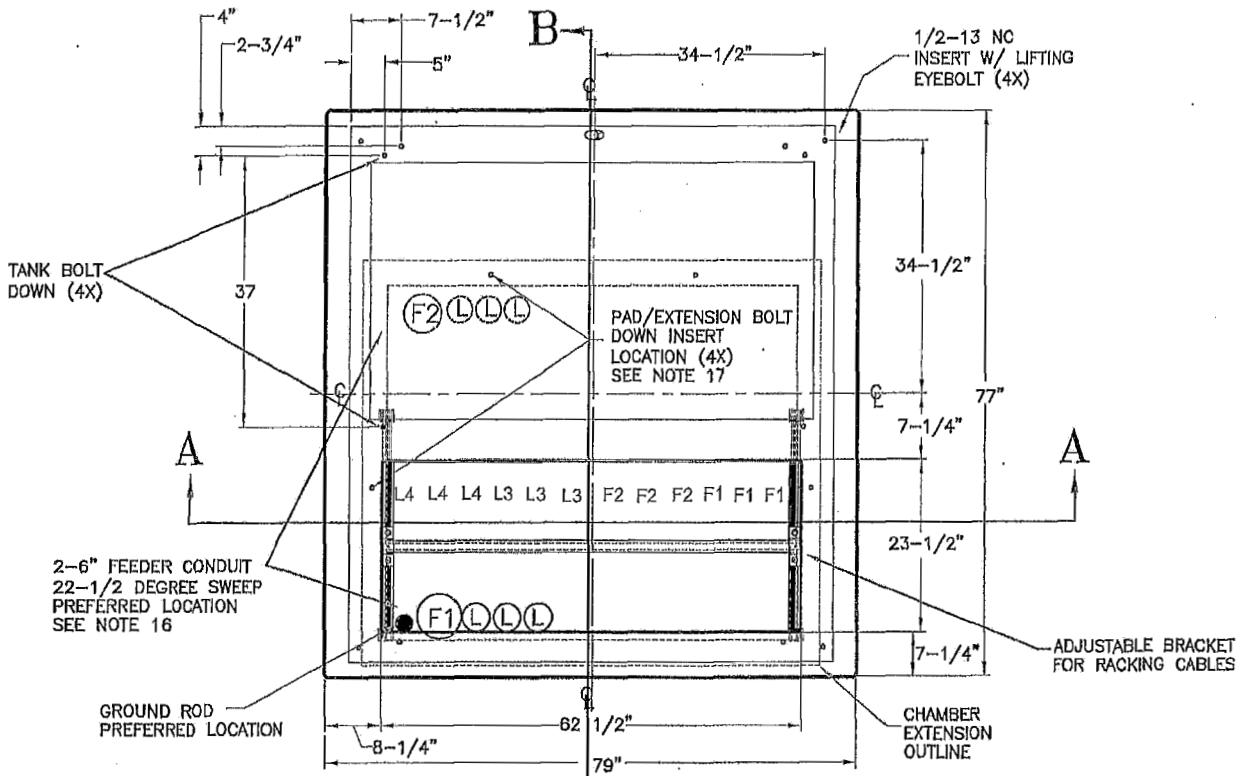

TOP VIEW OF PAD AND CHAMBER

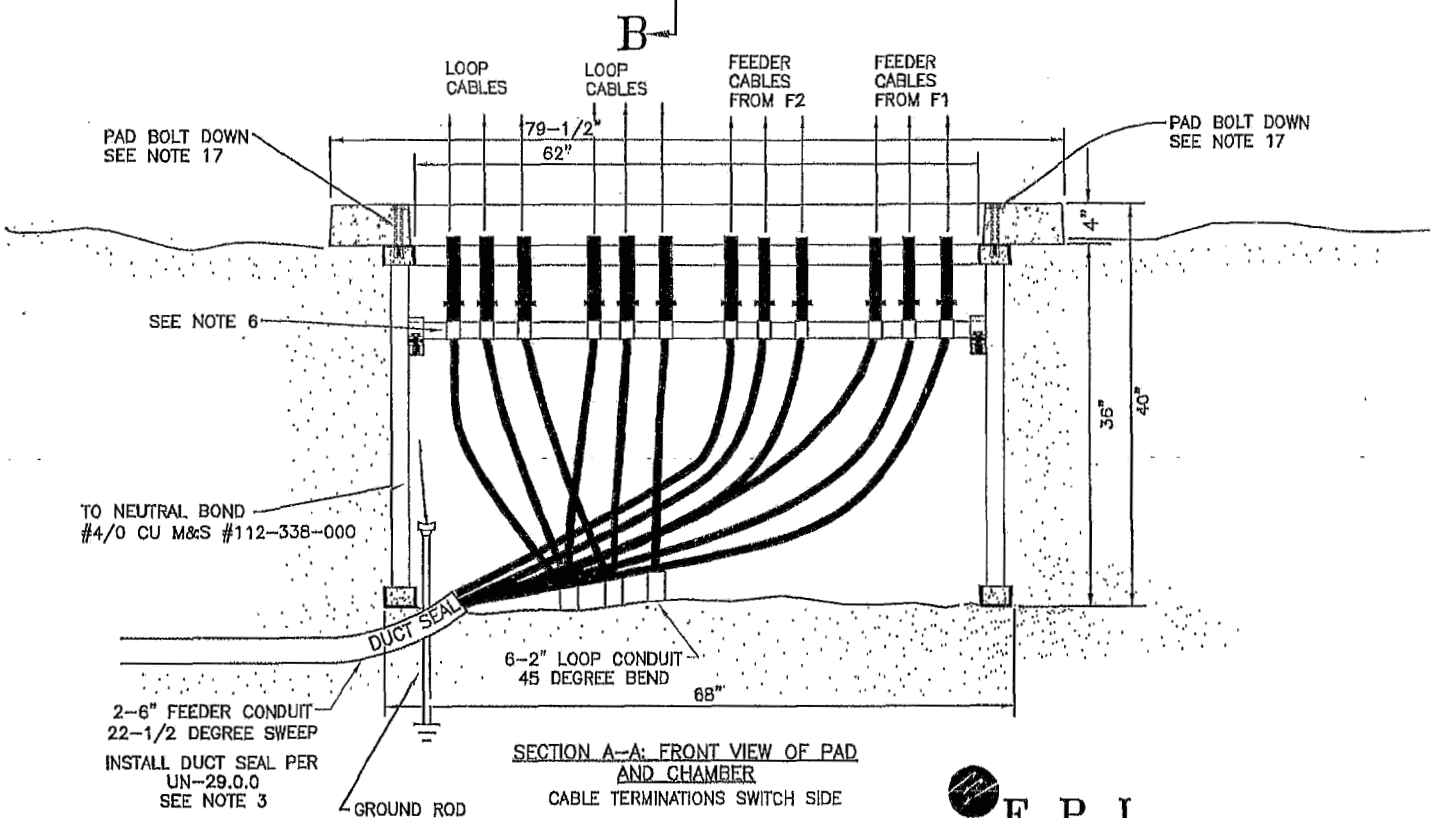

SECTION A-A: FRONT VIEW OF PAD AND CHAMBER
CABLE TERMINATIONS SWITCH SIDE

FPL

OH & UG DISTRIBUTION SYSTEM STANDARDS

ORIGINATOR: A. PANTOURIS DRAWN BY: E. SCHILLING

DATE: 5/29/09 APPROVED: ARI LIMA NO SCALE

LEAD SUPERVISOR, UG SERVICES

NO.	DATE	REVISION	ORIG.	DRAWN	APPR.
1	11/14/12	LOOP CABLE IDENTIFICATION	JGV	ELS	WM

C-46.0.1	TYPICAL INSTALLATION OF 25KV S&C VISTA THREE PHASE SWITCH FOR USE IN 13KV OR 23KV BELOW GRADE AND PAD MOUNTED APPLICATIONS	C-46.0.1

TYPICAL VISTA SWITCH MODEL 422 SHOWN

TOP VIEW OPERATION SIDE

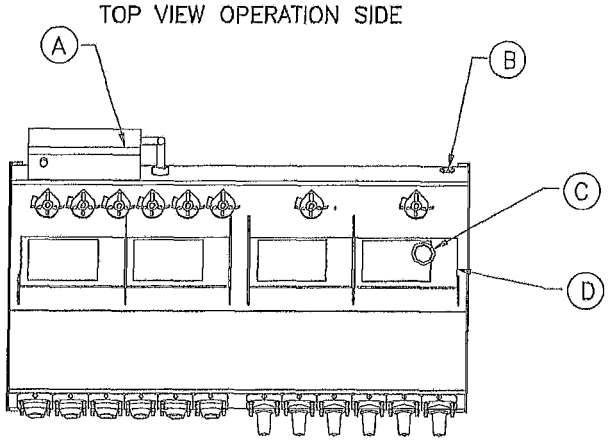

TOP VIEW TERMINATION SIDE

FEATURES IN THIS ASSEMBLY

A. OVERCURRENT CONTROL
B. GAS FILL PORT
C. PRESSURE GAUGE
D. WINDOW FOR VIEWING OPEN GAP AND GROUNDED POSITION OF LOAD-INTERRUPTER SWITCH OR FAULT INTERRUPTER
E. 200-AMPERE BUSHING-WELLS FOR FAULT-INTERRUPTER
F. 600-AMPERE BUSHINGS FOR LOAD-INTERRUPTER SWITCH
G. TWO-HOLE GROUND PAD
H. 600-AMPERE THREE-POLE LOAD-INTERRUPTER SWITCH WITH GROUND POSITION
I. OPERATING MECHANISM
J. MANUAL OPERATING HANDLE
K. NAMEPLATE
L. SUBMERSIBLE SF6-INSULATED TANK
M. 600-AMPERE ALUMINUM BUS
N. BASE BRACKET

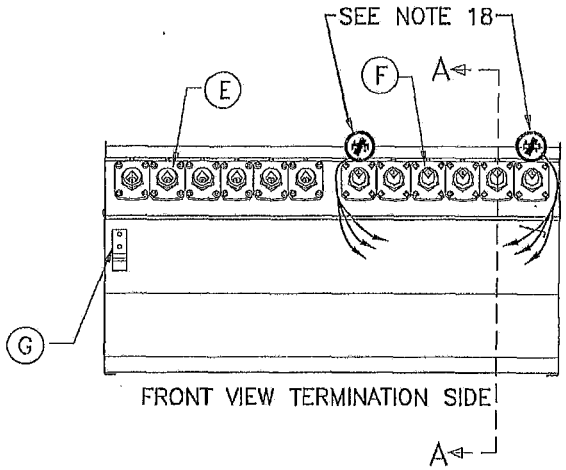

FRONT VIEW TERMINATION SIDE

TERMINATION SIDE

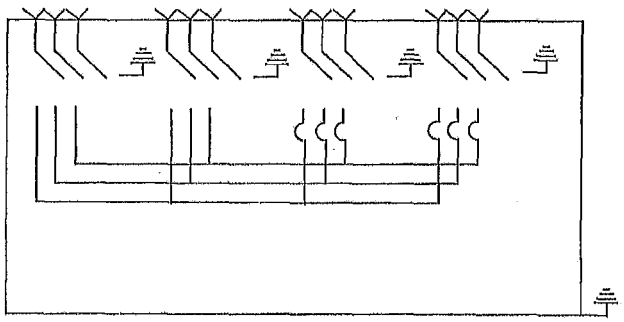

OPERATION SIDE

CONNECTION DIAGRAM

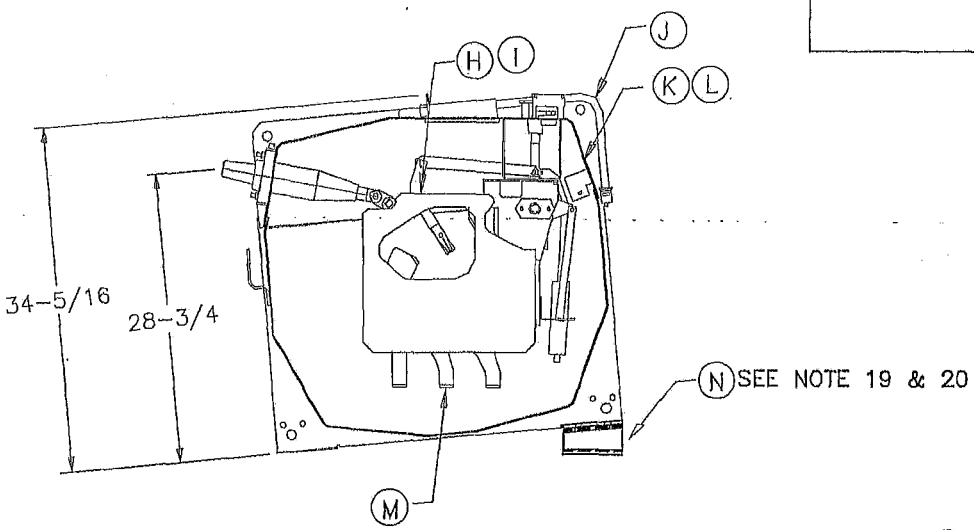

SECTION A-A: FEEDER SWITCH

NO.	DATE	REVISION	ORIG.	DRAWN	APPR.
1	11/14/12	CHANGE C-46.0.2 TO C-46.0.1	JGV	ELS	WM

F P L

OH & UG DISTRIBUTION SYSTEM STANDARDS

ORIGINATOR: A. PANTOURIS DRAWN BY: E. SCHILLING

DATE: 7/27/09 APPROVED: ARI LIMA NO SCALE

LEAD SUPERVISOR, UG SERVICES

C-46.0.2	TYPICAL INSTALLATION OF 25KV S&C VISTA THREE PHASE SWITCH FOR USE IN 13KV OR 23KV BELOW GRADE AND PAD MOUNTED APPLICATIONS	C-46.0.2

TYPICAL BUSHING POSITION ON VISTA SWITCH MODEL 431 SHOWN
F=FEEDER L=LATERAL

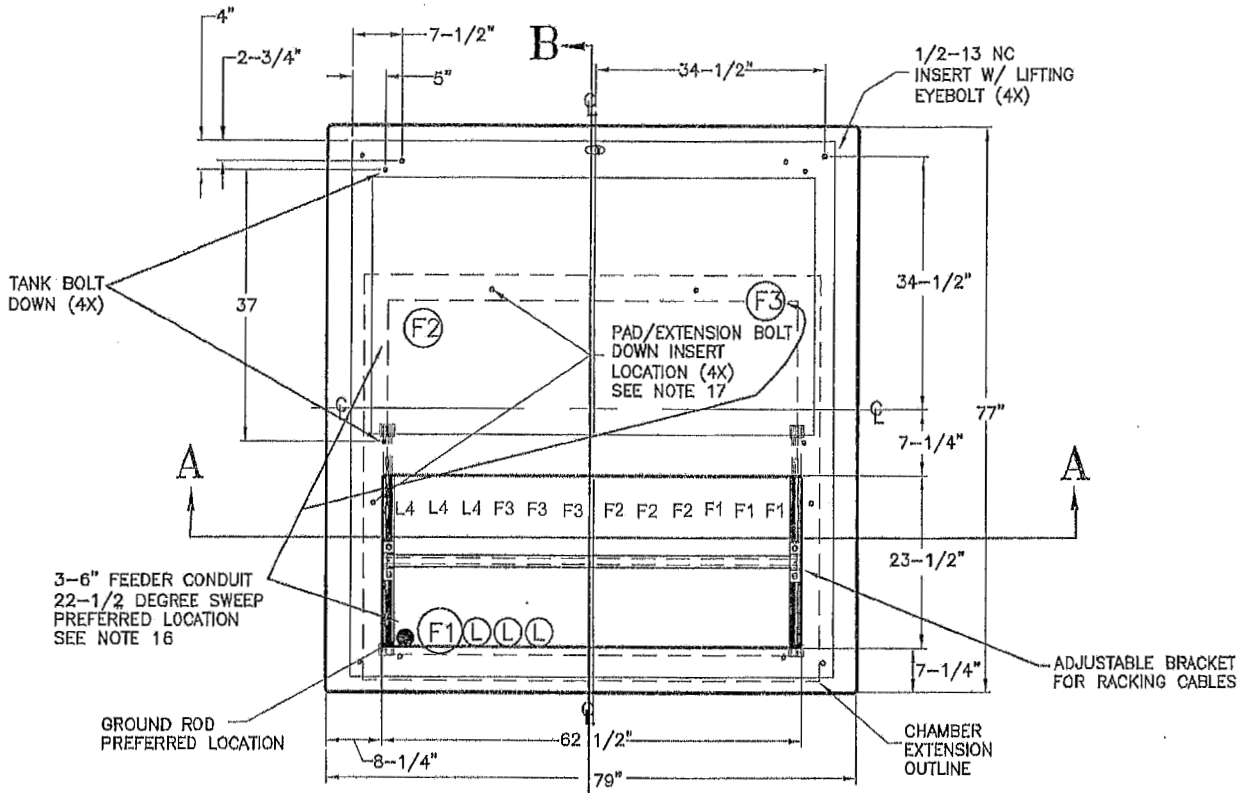

TOP VIEW OF PAD AND CHAMBER

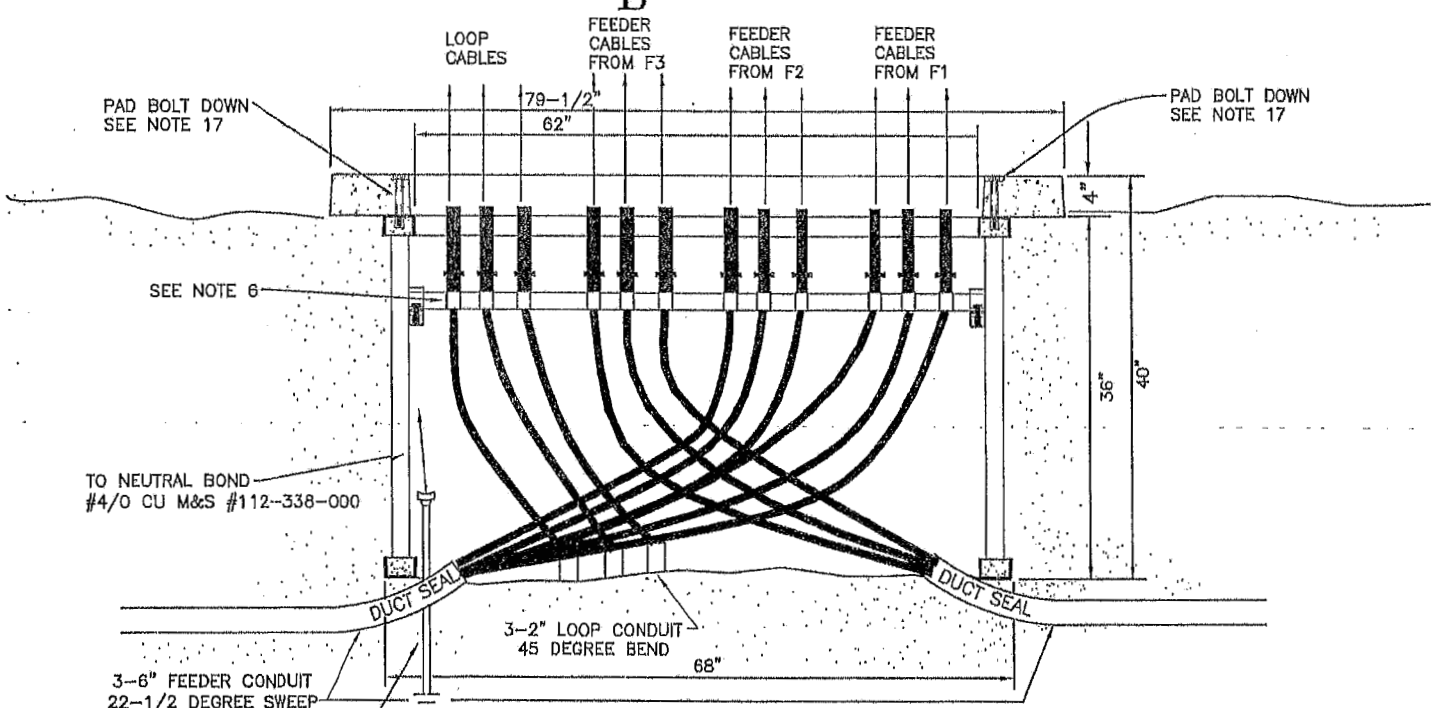

SECTION A-A: FRONT VIEW OF PAD AND CHAMBER
CABLE TERMINATIONS SWITCH SIDE

F P L

OH & UG DISTRIBUTION SYSTEM STANDARDS

ORIGINATOR: J. VALDES DRAWN BY: E. SCHILLING

DATE: 3/16/2012 APPROVED: WILLIAM MONZON NO SCALE

LEAD SUPERVISOR, UG SERVICES

NO.	DATE	REVISION	ORIG.	DRAWN	APPR.
1	11/14/12	NEW PAGE OF C-46	JGV	ELS	WM

C-46.0.3	TYPICAL INSTALLATION OF 25KV S&C VISTA THREE PHASE SWITCH FOR USE IN 13KV OR 23KV BELOW GRADE AND PAD MOUNTED APPLICATIONS	C-46.0.3

C

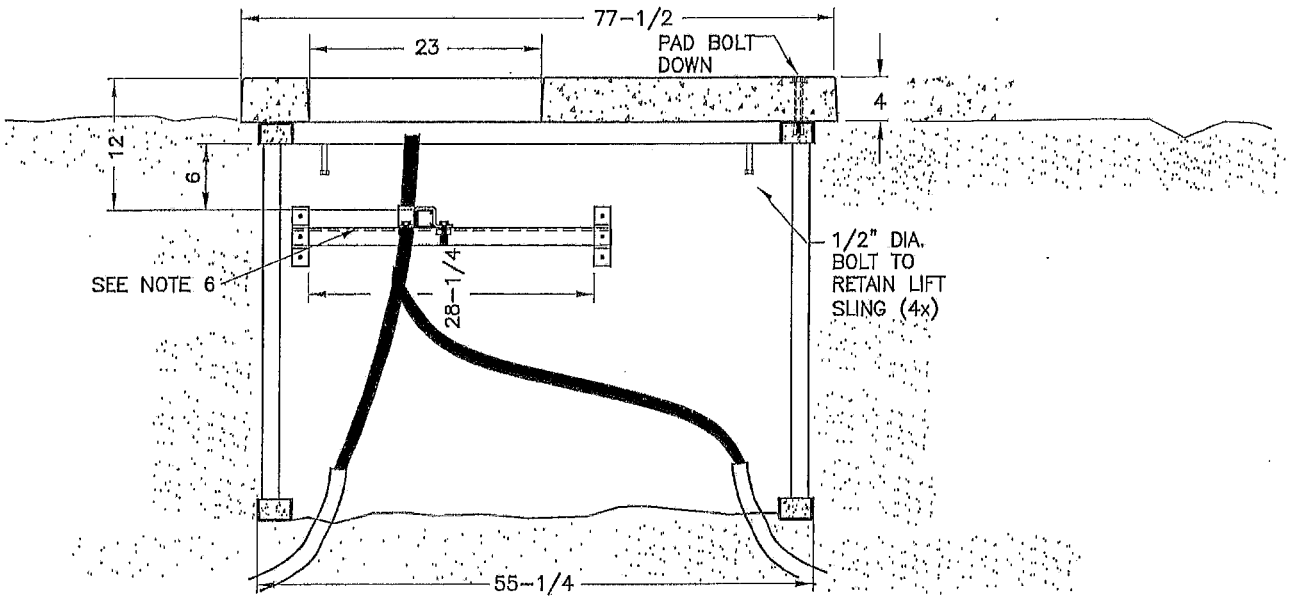

SECTION B-B: SIDE VIEW OF PAD AND CHAMBER

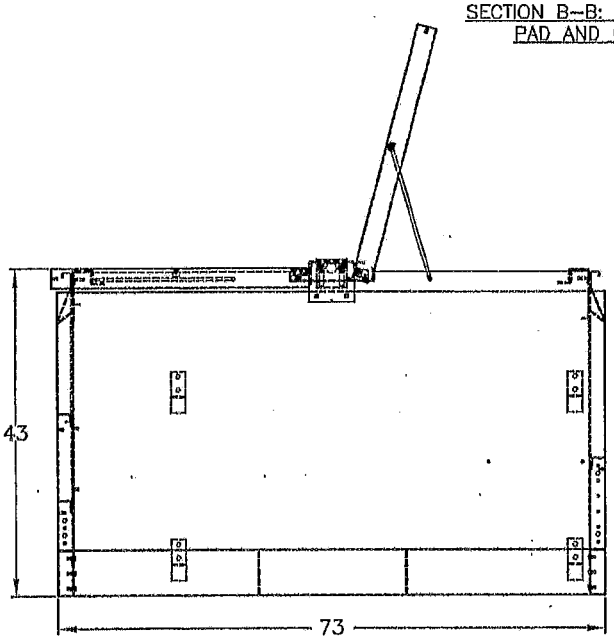

SWITCH ENCLOSURE SIDE VIEW

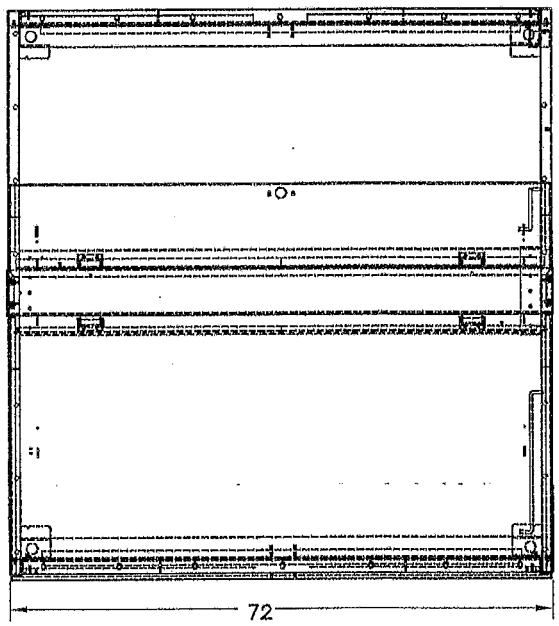

SWITCH ENCLOSURE TOP VIEW

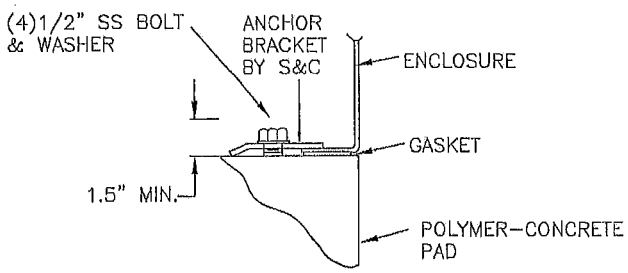

ENCLOSURE ANCHOR DETAIL

F P L

OH & UG DISTRIBUTION SYSTEM STANDARDS

ORIGINATOR: A. PANTOURIS DRAWN BY: E. SCHILLING

DATE: 7/27/09 APPROVED: ARI LIMA NO SCALE

LEAD SUPERVISOR, UG SERVICES

NO.	DATE	REVISION	ORIG.	DRAWN	APPR.
1	11/14/12	CHANGE C-46.0.1 TO C-46.0.3	JGV	ELS	WM

C-46.0.4	TYPICAL INSTALLATION OF 25KV S&C VISTA THREE PHASE SWITCH FOR USE IN 13KV OR 23KV BELOW GRADE AND PAD MOUNTED APPLICATIONS	C-46.0.4

MATERIAL LIST

ITEM	DESCRIPTION	QUANTITY	M&S NUMBER	WMS CU
1	VISTA 422 (4 "WAYS', 2-THREE PHASE FEEDER GANG SWITCHES AND TWO-THREE PHASE, INDIVIDUALLY PROTECTED LOAD TAPS, WITH A STAINLESS STEEL ENCLOSURE	1	279-209-050	SW-VISTA-422-PAD
	VISTA 431 (4 "WAYS', 3-THREE PHASE FEEDER GANG SWITCHES AND ONE-THREE PHASE, INDIVIDUALLY PROTECTED LOAD TAPS, WITH A STAINLESS STEEL ENCLOSURE		279-211-050	SW-VISTA-431-PAD
2	PAD AND CHAMBER FOR PM DF VISTA SWITCH (77"X 79"X 40" DEEP)	1	162-690-790	PD-SW-W/CC-VISTA
3	600 AMP T-BODY ELBOWS (25KV)	VARIES	163-639-007	TM-PDF-600-1K
4	200 AMP BUSHINGS (25KV)	VARIES	163-864-001	SW-PD-BSH
5	200 AMP LOADBREAK ELBOWS (25KV)	VARIES	163-502-001	TM-PDF-1/0
6	PROTECTIVE CAP (15KV ONLY)	VARIES	163-022-000	TM-PDF-GC
7	ELBOW SURGE ARRESTERS (25KV ONLY)	VARIES	334-015-005	TM-PDF-LA
8	GROUND ROD CONNECTOR, CLAMP TYPE	1	120-036-106	DG-CLP-5/8
9	GROUND RODS, AS NEEDED	VARIES	130-614-005	DG-PKG-5/8
10	GROUND ROD COUPLINGS	VARIES	130-405-104	DG-C-5/8
11	#4 COPPER WIRE, SDB	6	112-309-000	SW-PMD-GC (Qty - 1)
12	#4/0 CU CABLE, 600V	27	110-101-169	
13	#4/0 CABLE CONNECTORS	6	120-871-005	
14	COPPER TO COPPER BOLTED CONNECTORS	22	102-800-002	
15	STANDARD LOCKS	2	546-246-011	SW-PMD-LOCK
16	CABLE MOUNTING BRACKET, STAINLESS	12	160-310-000	SW-VISTA-MT-HDW
17	BOLTS, SS, 1/2"X 1-1/2" FOR CABLE BRACKET		140-515-557	
18	SPRING, NUTS, SS, FOR 1/2" BOLT FOR CABLE BRACKET		161-463-000	
19	LOCK WASHER, 1/2", FOR CABLE BRACKET		145-294-010	
20	800 AMP FAULT INDICATOR	VARIES	163-297-009	P-CL-FCI-800
21	ROTATABLE FEEDTHRU DEVICE, 200AMP, 25KV	6	163-250-002	SW-VISTA-422-PAD
		3	163-250-002	SW-VISTA-431-PAD

NOTES:
1. THE INTERRUPTERS MUST BE PRE-SET BY THE ERC PRIOR TO BEING ISSUED TO THE JOB. CALL 863-4921 OR 863-4900 TO MAKE ARRANGEMENTS.
2. THE PAD MOUNTED VISTA SWITCH MAY BE INSTALLED IN AREAS SUBJECT TO FLOODING.
3. SEAL THE INCOMING DUCTS PER UN-29.0.0.
4. THE SWITCH AND ITS ENCLOSURE MUST BE BOLTED TO THE PAD.
5. REFER TO DCS UH-41.0.1 FOR PROPER INSTALLATION OF 600 AMP T-BODY ELBOWS.
6. BOTH THE FEEDER CABLES AND LOOP SIDE CABLES ARE TO BE RACKED THROUGH THE CABLE SUPPORT BRACKETS INSTALLED ON THE UNISTRUT IN THE CABLE CHAMBER.
7. CABLES MUST NOT BE IN CONTACT WITH THE CABLE CHAMBER OR PAD TOP.
8. ALLOW SUFFICIENT LENGTH OF CONCENTRIC NEUTRAL TO REACH GROUNDING BARS AND PERMIT THE FREE MOVEMENT OF THE ELBOWS.
9. MAKE CERTAIN OF CABLES LOCATIONS BEFORE DRIVING GROUND RODS.
10. APPLY CAULKING COMPOUND TO THE SEAM BETWEEN THE ENCLOSURE AND THE PAD TOP.
11. DUST CAPS USED FOR COVERING BUSHINGS AND BUSHING WELLS DURING SHIPMENT MUST BE REMOVED PRIOR TO ENERGIZING THE SWITCH.
12. UNUSED LOAD TAPS MUST HAVE BUSHINGS AND PROTECTIVE CAPS INSTALLED.
13. UNUSED FEEDER POSITIONS MUST HAVE 600 AMP PROTECTIVE CAPS INSTALLED (M&S #163-645-007).
14. AFTER THE SWITCH ENCLOSURE HAS BEEN INSTALLED, THE LIFTING BRACKETS MUST BE REMOVED AND STORED INSIDE THE ENCLOSURE FOR FUTURE USE.
15. ENSURE THAT THE WARNING LABEL (M&S #548-560-104) IS INSTALLED ON BOTH THE CABLE COMPARTMENT AND THE OPERATOR SIDES OF THE ENCLOSURE.
16. INSTALL FEEDER CONDUITS AS SHOWN IN C-46.0.0 AND C-46.0.2 ON LEFT AND/OR REAR SIDE OF CABLE CHAMBER TO ALLOW FOR BENDING RADIUS OF CABLE.
17. BOLTS FOR SECURING PAD TO CHAMBER ARE INCLUDED FROM VENDOR. THERE ARE 4 BOLTING LOCATIONS AS SHOWN ON DRAWINGS.
18. INSTALL 800 AMP 3ø FAULT INDICATORS ON EACH SET OF FEEDER CABLES. SEE UV-14.0.0, UV-14.0.1, & UV-14.0.2.
19. FOR PAD MOUNTED APPLICATIONS, THE BASE BRACKETS ("FEET"). "N" AS SHOWN IN C-46.0.1 ARE REQUIRED.
20. THE BASE BRACKETS ARE NOT REQUIRED FOR BELOW GRADE ("UNDER-COVER") APPLICATIONS, BUT SHOULD BE KEPT WITH THE SWITCH IN THE POSSIBLE EVENT OF FUTURE RE-USE IN A PAD MOUNTED APPLICATION.
21. INSTALL ROTATABLE FEED-THRU DEVICE ON THE LOAD SIDE OF THE VISTA SWITCH (M&S #163-250-002)

F P L

OH & UG DISTRIBUTION SYSTEM STANDARDS

NO.	DATE	REVISION	ORIG.	DRAWN	APPR.
2	11/14/12	UPDATE NOTES 16 AND 19 ADD NOTE 21 AND ITEM 21	JGV	ELS	WM
1	9/2/10	UPDATE ITEM 16	GAP	ELS	BXN

ORIGINATOR: A. PANTOURIS DRAWN BY: E. SCHILLING

DATE: 9/1/03 APPROVED: ARI LIMA NO SCALE

LEAD SUPERVISOR, UG SERVICES

SUNSET ISLANDS 3 &4

ATT UNDERGROUNDING DESIGN PLANS AND SPECIFICATION

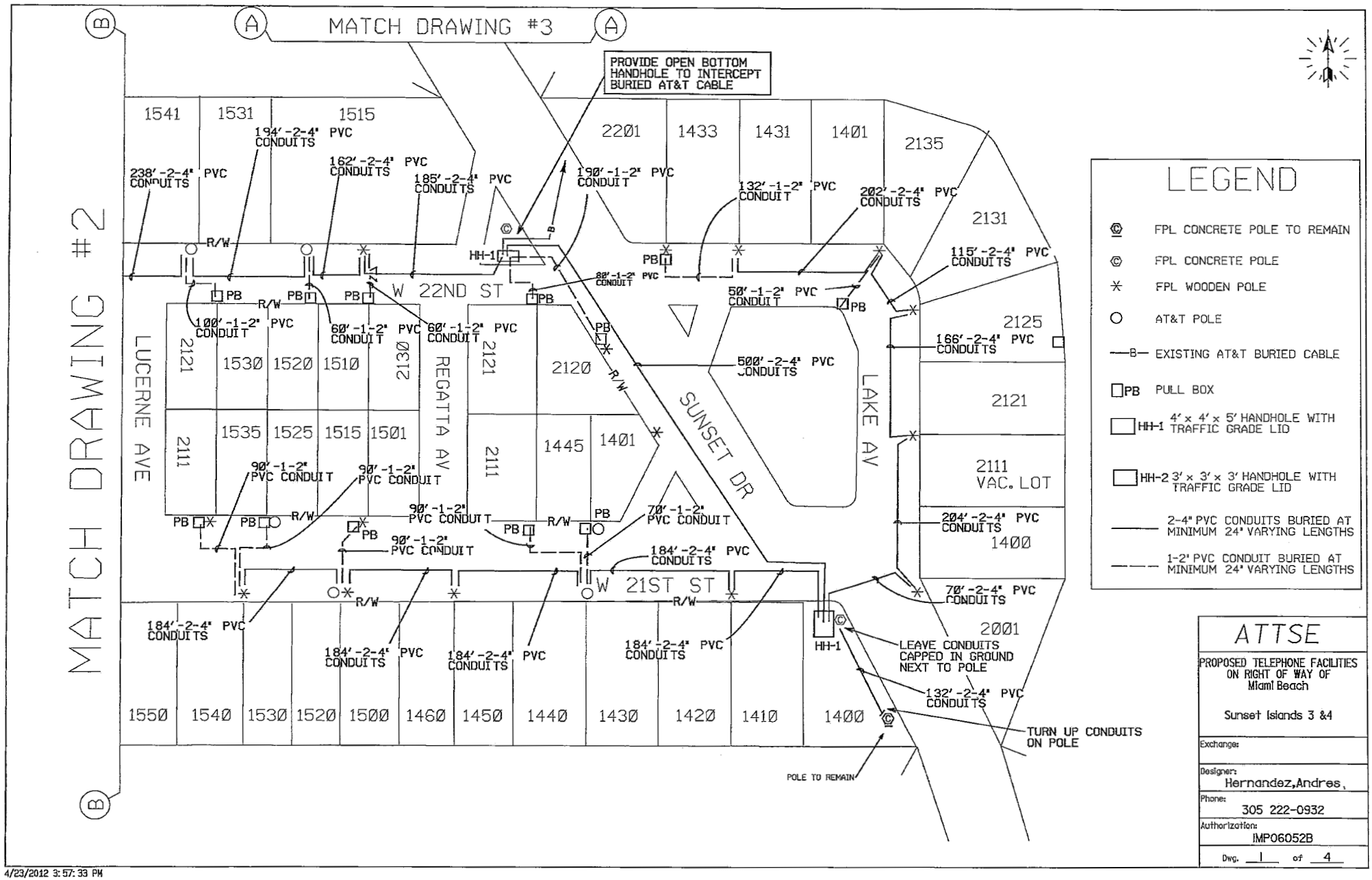

4/23/2012 3:57:33 PM

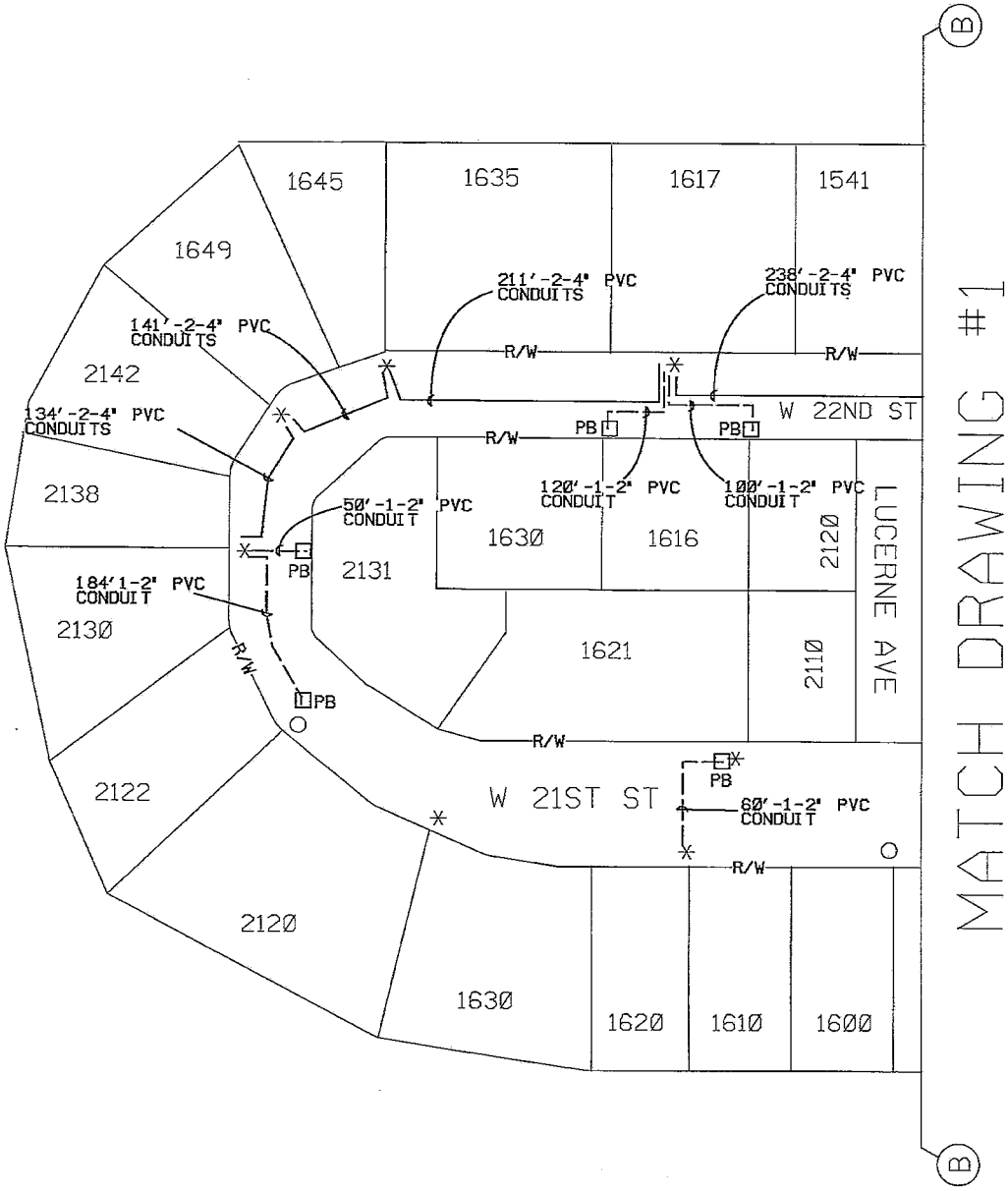

MATCH DRAWING #1

ATTSE

PROPOSED TELEPHONE FACILITIES
ON RIGHT OF WAY OF
Miami Beach

Sunset Islands 3 &4

Exchange:

Designer:
Hernandez,Andres

Phone:
305 222-0932

Authorization:
IMP06052B

Dwg. 2 of 4

4/23/2012 3:57:35 PM

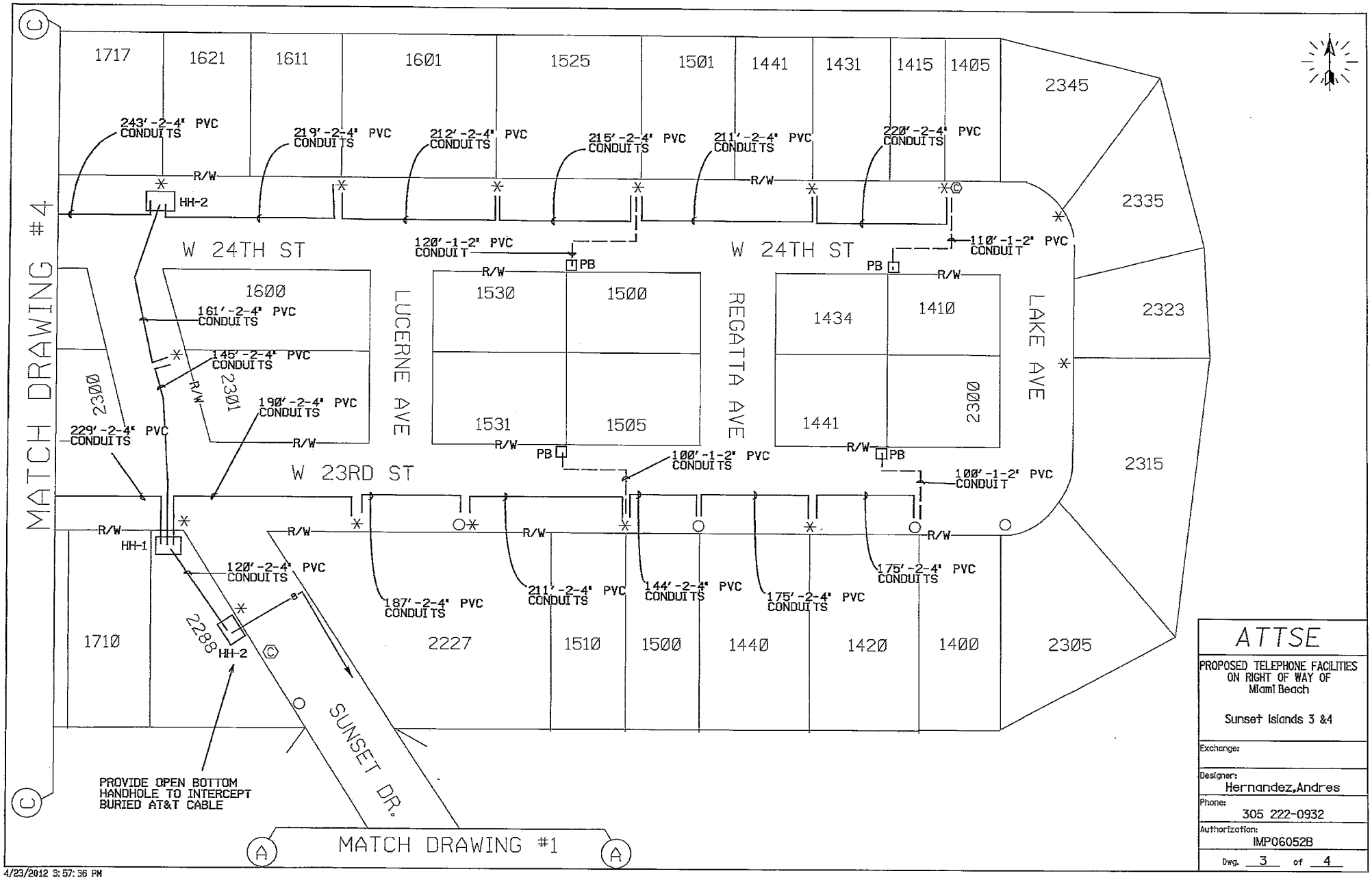
MATCH DRAWING #4
MATCH DRAWING #1
W 24TH ST
W 23RD ST
LUCERNE AVE
REGATTA AVE
LAKE AVE
SUNSET DR.
1717
1621
1611
1601
1525
1501
1441
1431
1415
1405
2345
2335
2323
2315
2305
1600
1530
1500
1531
1505
1434
1410
1441
2300
2301
2302
1710
2288
2227
1510
1500
1440
1420
1400
R/W
HH-1
HH-2
PB
243'-2-4" PVC CONDUITS
219'-2-4" PVC CONDUITS
212'-2-4" PVC CONDUITS
215'-2-4" PVC CONDUITS
211'-2-4" PVC CONDUITS
220'-2-4" PVC CONDUITS
120'-1-2" PVC CONDUIT
110'-1-2" PVC CONDUIT
161'-2-4" PVC CONDUITS
145'-2-4" PVC CONDUITS
190'-2-4" PVC CONDUITS
229'-2-4" PVC CONDUITS
100'-1-2" PVC CONDUITS
100'-1-2" PVC CONDUIT
120'-2-4" PVC CONDUITS
187'-2-4" PVC CONDUITS
211'-2-4" PVC CONDUITS
144'-2-4" PVC CONDUITS
175'-2-4" PVC CONDUITS
175'-2-4" PVC CONDUITS
PROVIDE OPEN BOTTOM HANDHOLE TO INTERCEPT BURIED AT&T CABLE
ATTSE
PROPOSED TELEPHONE FACILITIES ON RIGHT OF WAY OF Miami Beach
Sunset Islands 3 &4
Exchange:
Designer: Hernandez,Andres
Phone: 305 222-0932
Authorization: IMP06052B
Dwg. 3 of 4
4/23/2012 3:57:36 PM

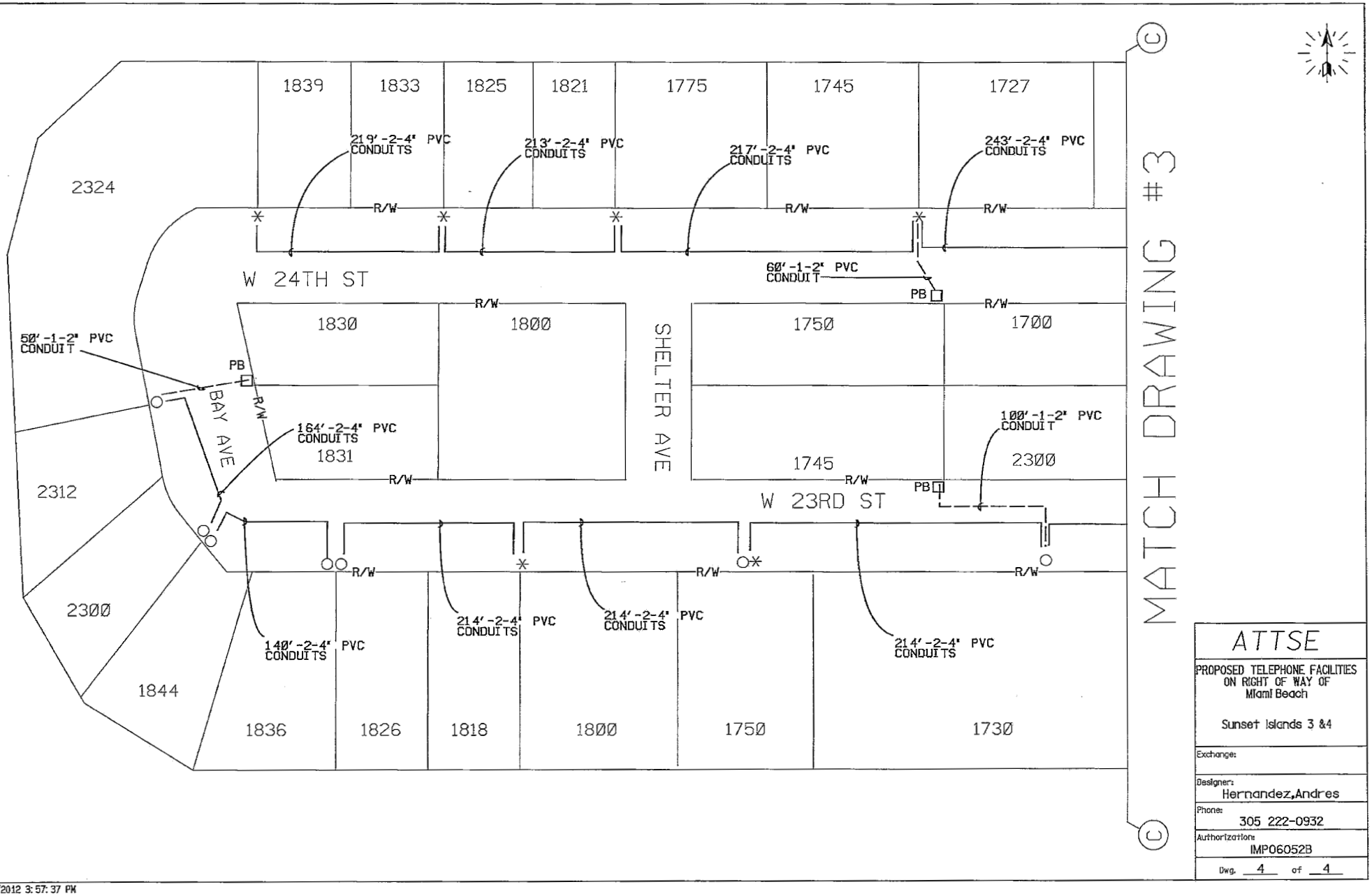

ATTSE

PROPOSED TELEPHONE FACILITIES
ON RIGHT OF WAY OF
Miami Beach

Sunset Islands 3 &4

Exchange:

Designer: Hernandez,Andres

Phone: 305 222-0932

Authorization: IMP06052B

Dwg. 4 of 4

4/23/2012 3:57:37 PM

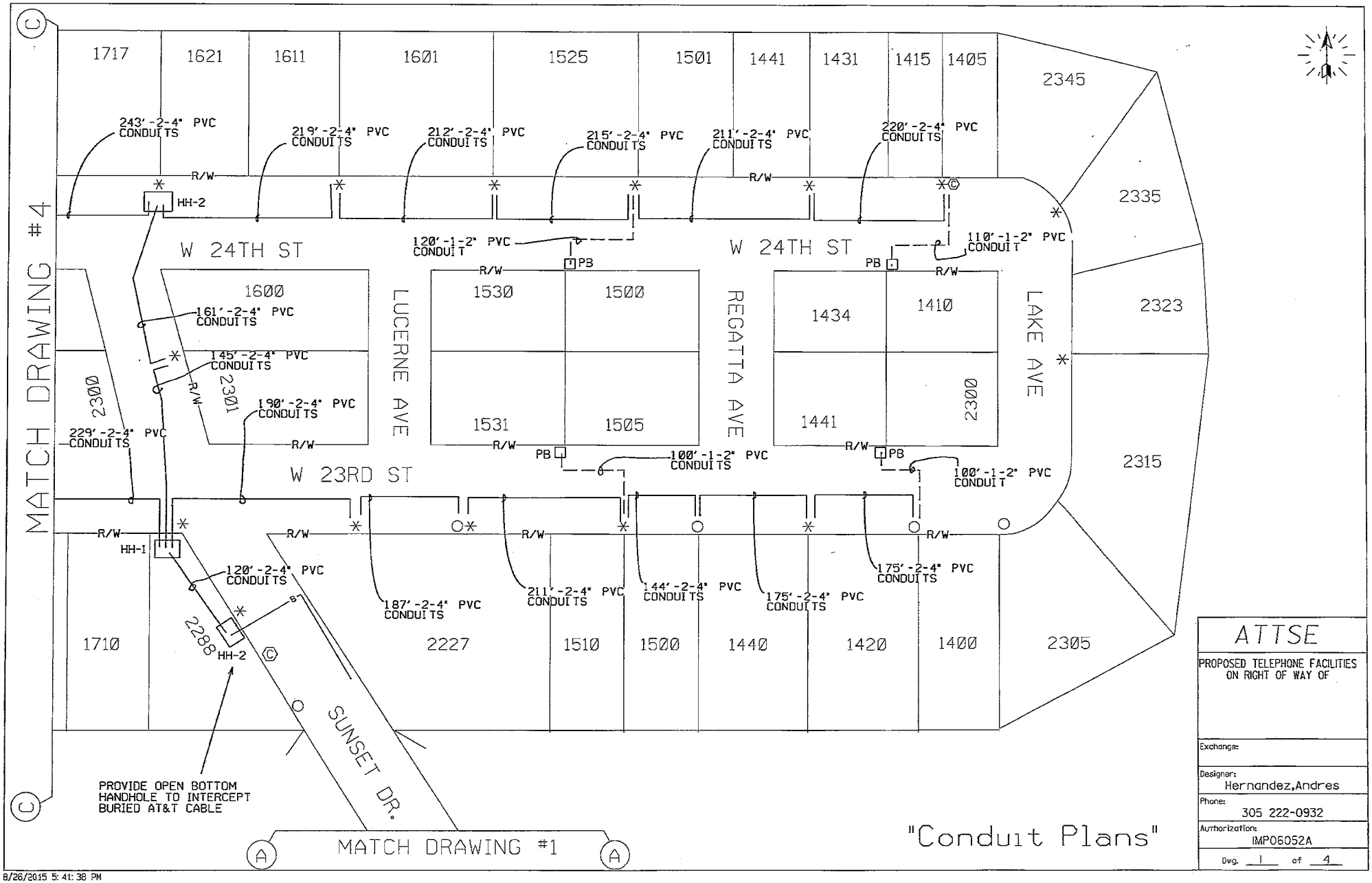

ATTSE

PROPOSED TELEPHONE FACILITIES ON RIGHT OF WAY OF

Exchange:

Designer: Hernandez,Andres

Phone: 305 222-0932

Authorization: IMP06052A

Dwg. 1 of 4

"Conduit Plans"

8/26/2015 5:41:38 PM

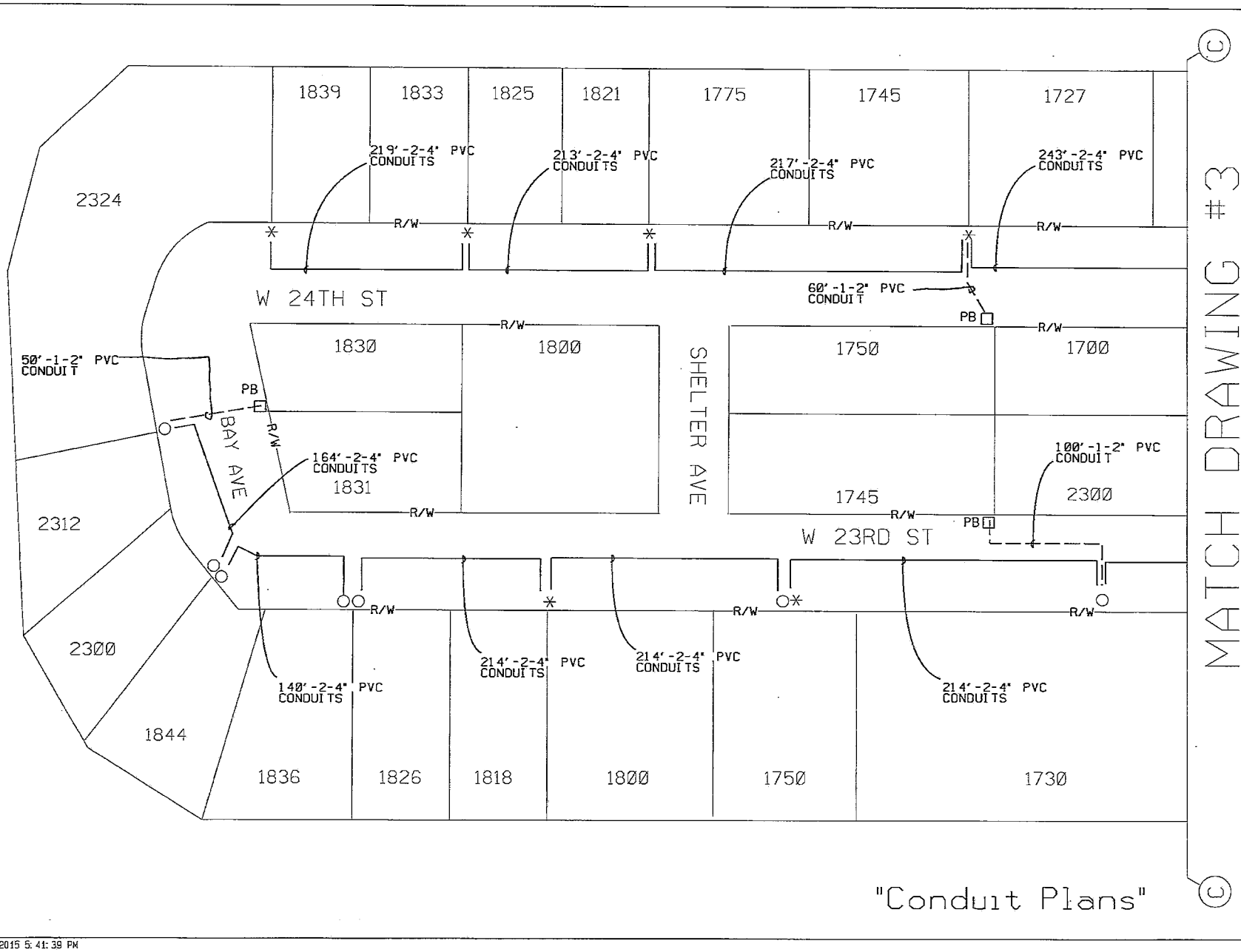

"Conduit Plans"

ATTSE

PROPOSED TELEPHONE FACILITIES ON RIGHT OF WAY OF

Exchange:

Designer: Hernandez,Andres

Phone: 305 222-0932

Authorization: IMP06052A

Dwg. 2 of 4

8/26/2015 5:41:39 PM

"Conduit Plans"

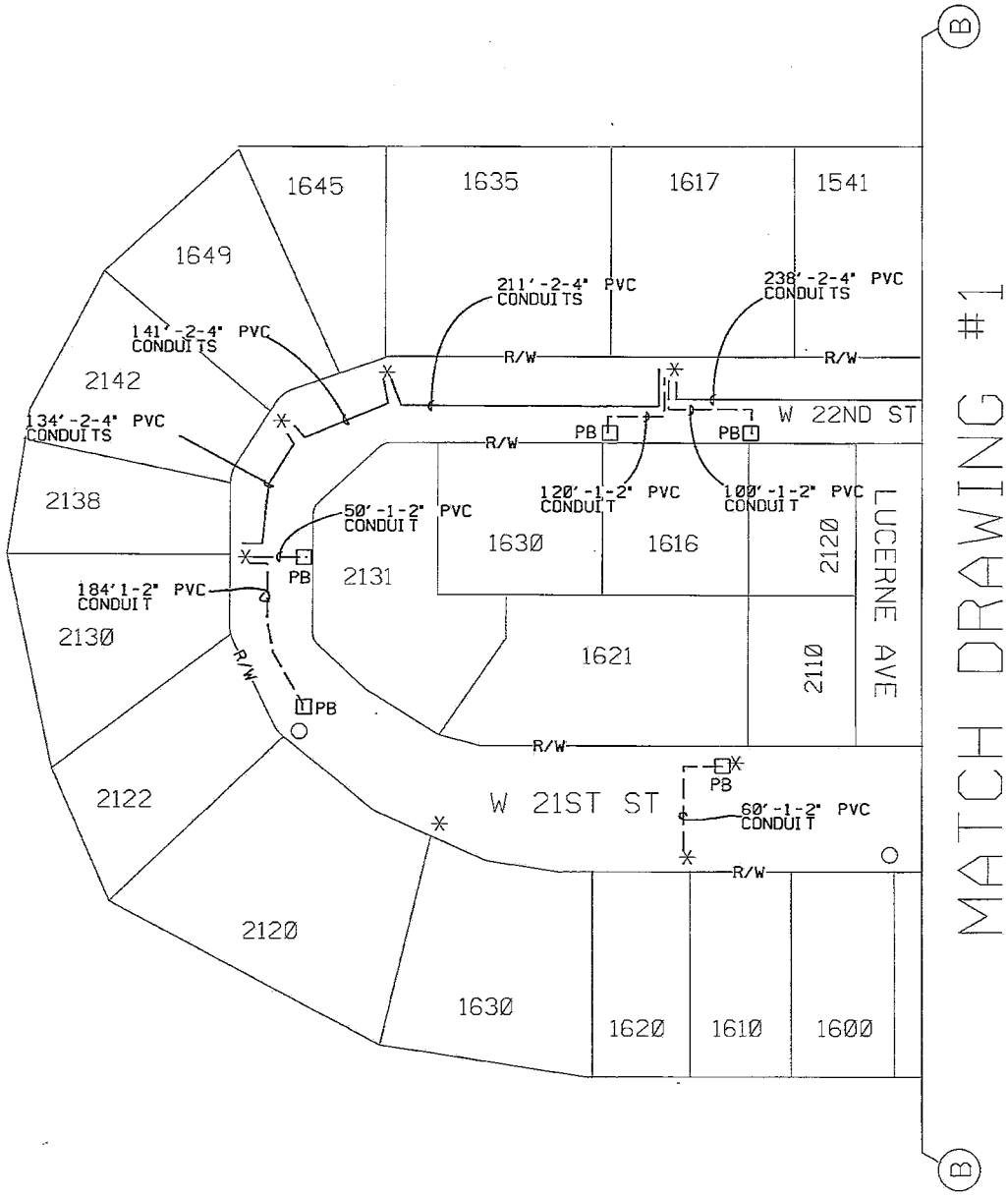

MATCH DRAWING #1

ATTSE
PROPOSED TELEPHONE FACILITIES ON RIGHT OF WAY OF
Exchange:
Designer: Hernandez,Andres
Phone: 305 222-0932
Authorization: IMP06052A
Dwg. 3 of 4

8/26/2015 5:41:40 PM

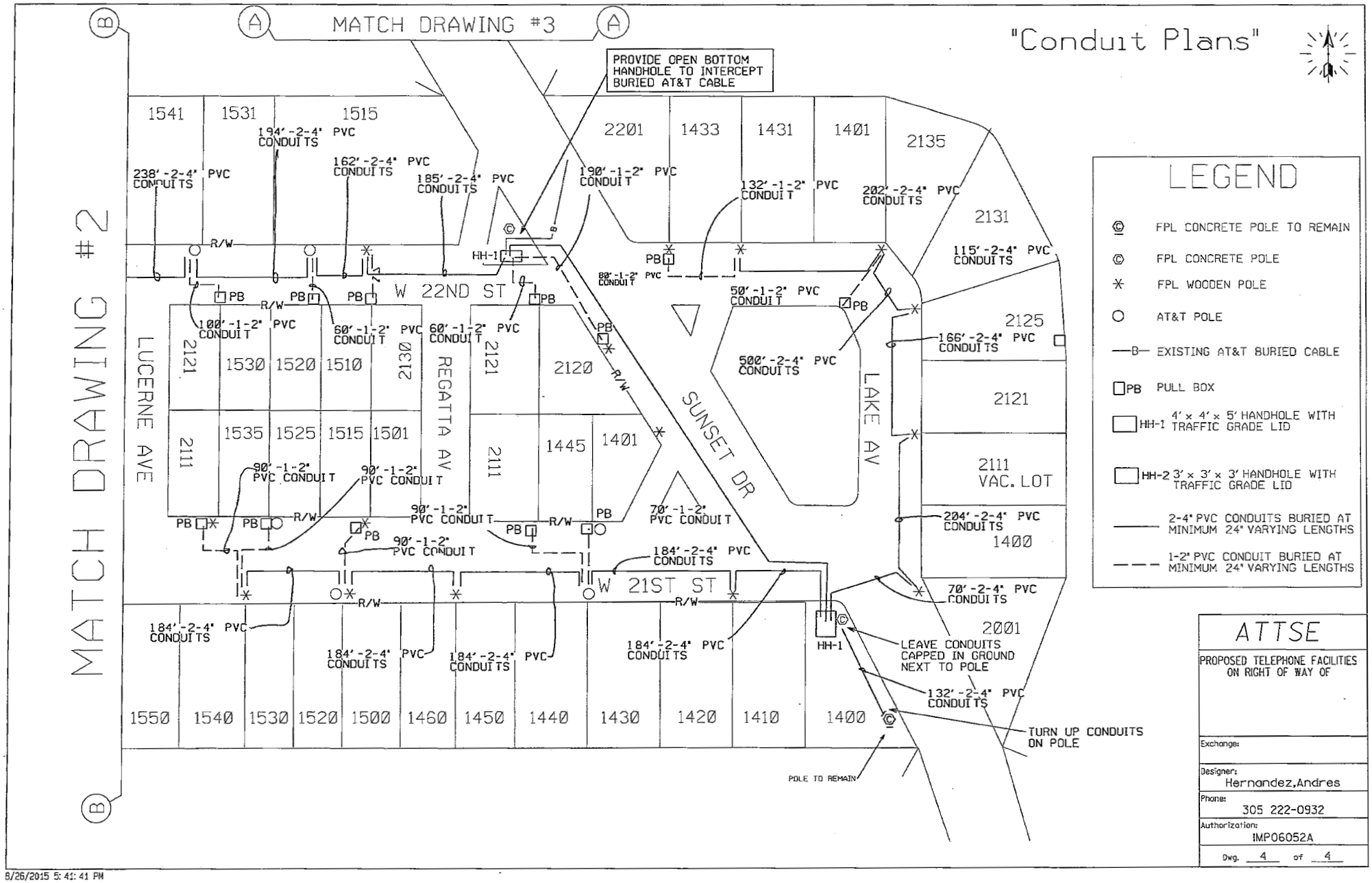
"Conduit Plans"
MATCH DRAWING #3
MATCH DRAWING #2
PROVIDE OPEN BOTTOM HANDHOLE TO INTERCEPT BURIED AT&T CABLE
W 22ND ST
W 21ST ST
LUCERNE AVE
REGATTA AV
SUNSET DR
LAKE AV
1541
1531
1515
2201
1433
1431
1401
2135
2131
2125
2121
2111 VAC. LOT
1400
2001
1550
1540
1530
1520
1500
1460
1450
1440
1430
1420
1410
1400
2121
1530
1520
1510
2130
2121
2120
2111
1535
1525
1515
1501
2111
1445
1401
238'-2-4" PVC CONDUITS
194'-2-4" PVC CONDUITS
162'-2-4" PVC CONDUITS
185'-2-4" PVC CONDUITS
190'-1-2" PVC CONDUIT
132'-1-2" PVC CONDUIT
202'-2-4" PVC CONDUITS
115'-2-4" PVC CONDUITS
80'-1-2" PVC CONDUIT
50'-1-2" PVC CONDUIT
500'-2-4" PVC CONDUITS
166'-2-4" PVC CONDUITS
204'-2-4" PVC CONDUITS
70'-2-4" PVC CONDUITS
100'-1-2" PVC CONDUIT
60'-1-2" PVC CONDUIT
60'-1-2" PVC CONDUIT
90'-1-2" PVC CONDUIT
90'-1-2" PVC CONDUIT
90'-1-2" PVC CONDUIT
90'-1-2" PVC CONDUIT
70'-1-2" PVC CONDUIT
184'-2-4" PVC CONDUITS
184'-2-4" PVC CONDUITS
184'-2-4" PVC CONDUITS
184'-2-4" PVC CONDUITS
184'-2-4" PVC CONDUITS
132'-2-4" PVC CONDUITS
HH-1
HH-1
PB
R/W
LEAVE CONDUITS CAPPED IN GROUND NEXT TO POLE
TURN UP CONDUITS ON POLE
POLE TO REMAIN
LEGEND
FPL CONCRETE POLE TO REMAIN
FPL CONCRETE POLE
FPL WOODEN POLE
AT&T POLE
EXISTING AT&T BURIED CABLE
PB PULL BOX
HH-1 4' x 4' x 5' HANDHOLE WITH TRAFFIC GRADE LID
HH-2 3' x 3' x 3' HANDHOLE WITH TRAFFIC GRADE LID
2-4" PVC CONDUITS BURIED AT MINIMUM 24" VARYING LENGTHS
1-2" PVC CONDUIT BURIED AT MINIMUM 24" VARYING LENGTHS
ATTSE
PROPOSED TELEPHONE FACILITIES ON RIGHT OF WAY OF
Exchange:
Designer: Hernandez,Andres
Phone: 305 222-0932
Authorization: IMP06052A
Dwg. 4 of 4
8/26/2015 5:41:41 PM

SUNSET ISLANDS 3 &4

ABB UNDERGROUNDING DESIGN PLANS AND SPECIFICATION

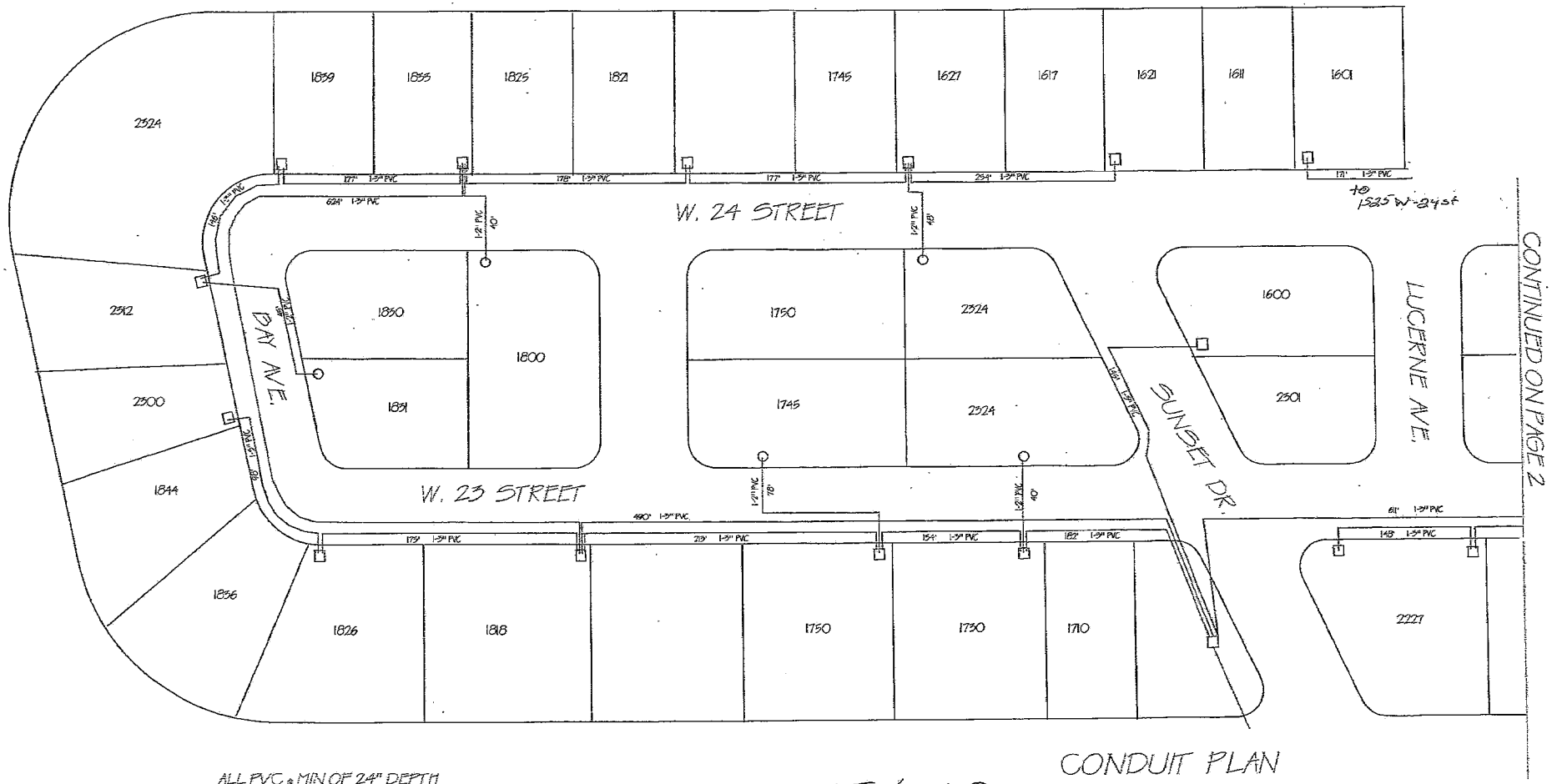

ALL PVC @ MIN OF 24" DEPTH

CONDUIT PLAN

Sunset Island 3

ALL PVC @ MIN OF 24" DEPTH

Sunset Island 3

CONDUIT PLAN

ALL PVC & MIN OF 24" DEPTH

CONDUIT PLAN

Sunset Island 4