NORTH BEACH MARKERS

Shulman + Associates for the City of Miami Beach

Signage Schematic Design Set

2016

Shulman + Associates

Architecture Interior Design Urban Design Graphic Design · 100 NE 38 Street Miami, FL 33137 305 438 0609 shulman-design.com AA 26001090

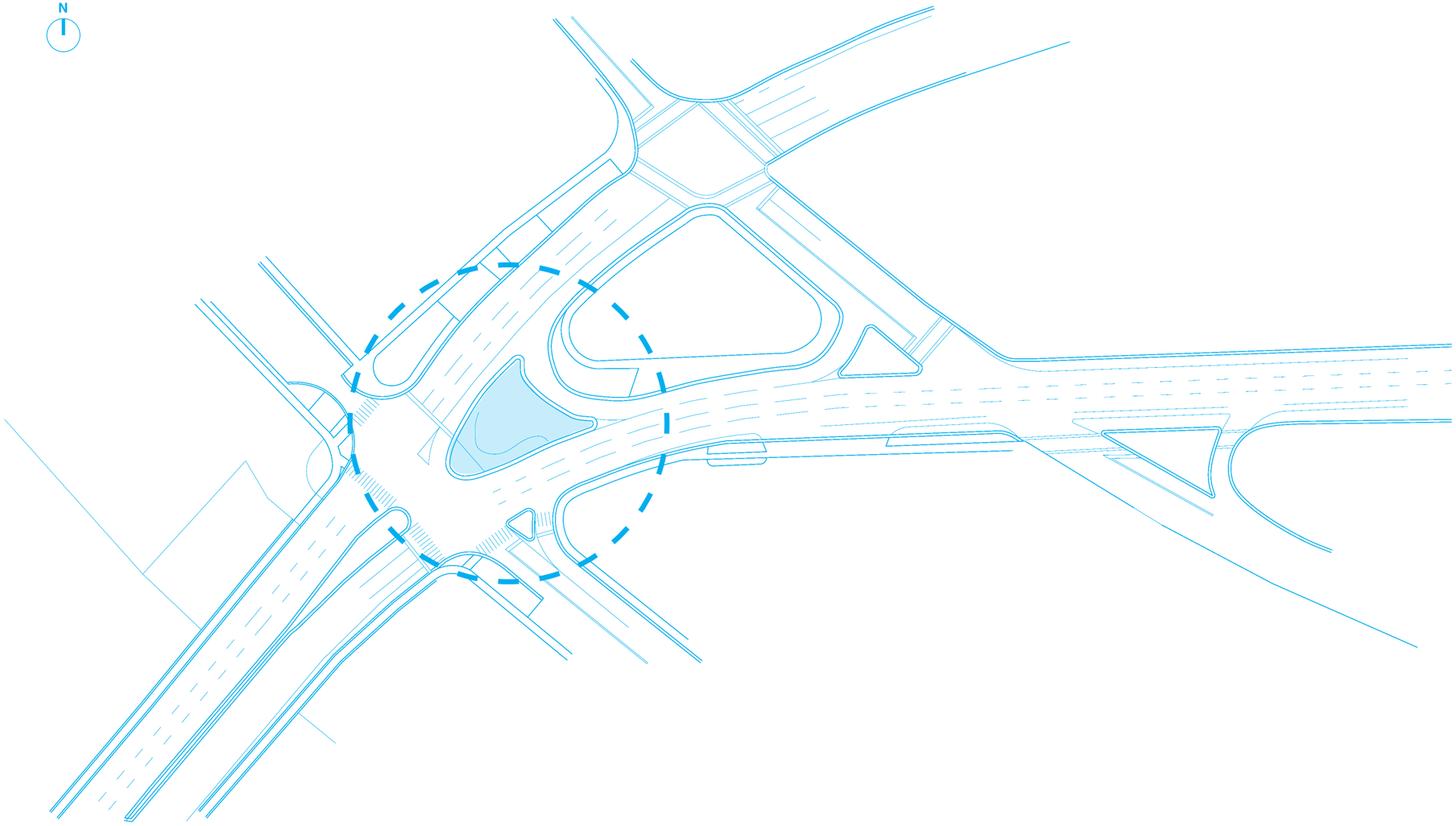

NORMANDY ISLES ENTRANCE

EXISTING CONDITIONS

1

2

3

4

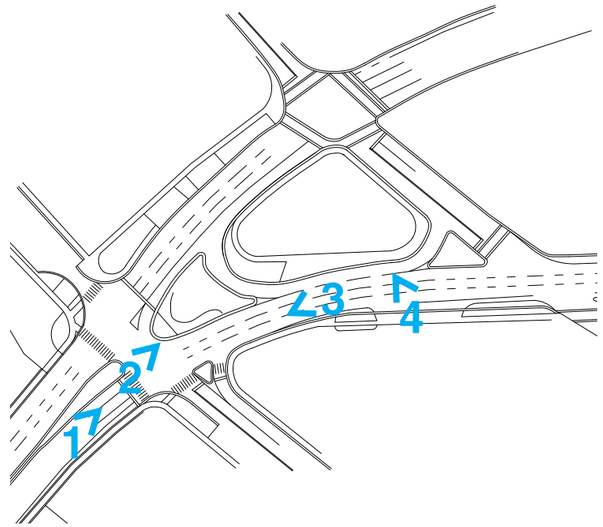

©2015 Shulman + Associates

EXISTING CONDITIONS

5

6

7

8

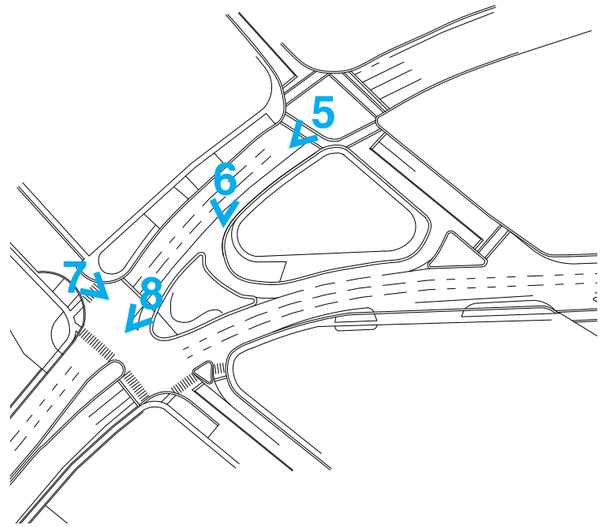

©2015 Shulman + Associates

NORMANDY ISLES ENTRANCE PROPOSAL

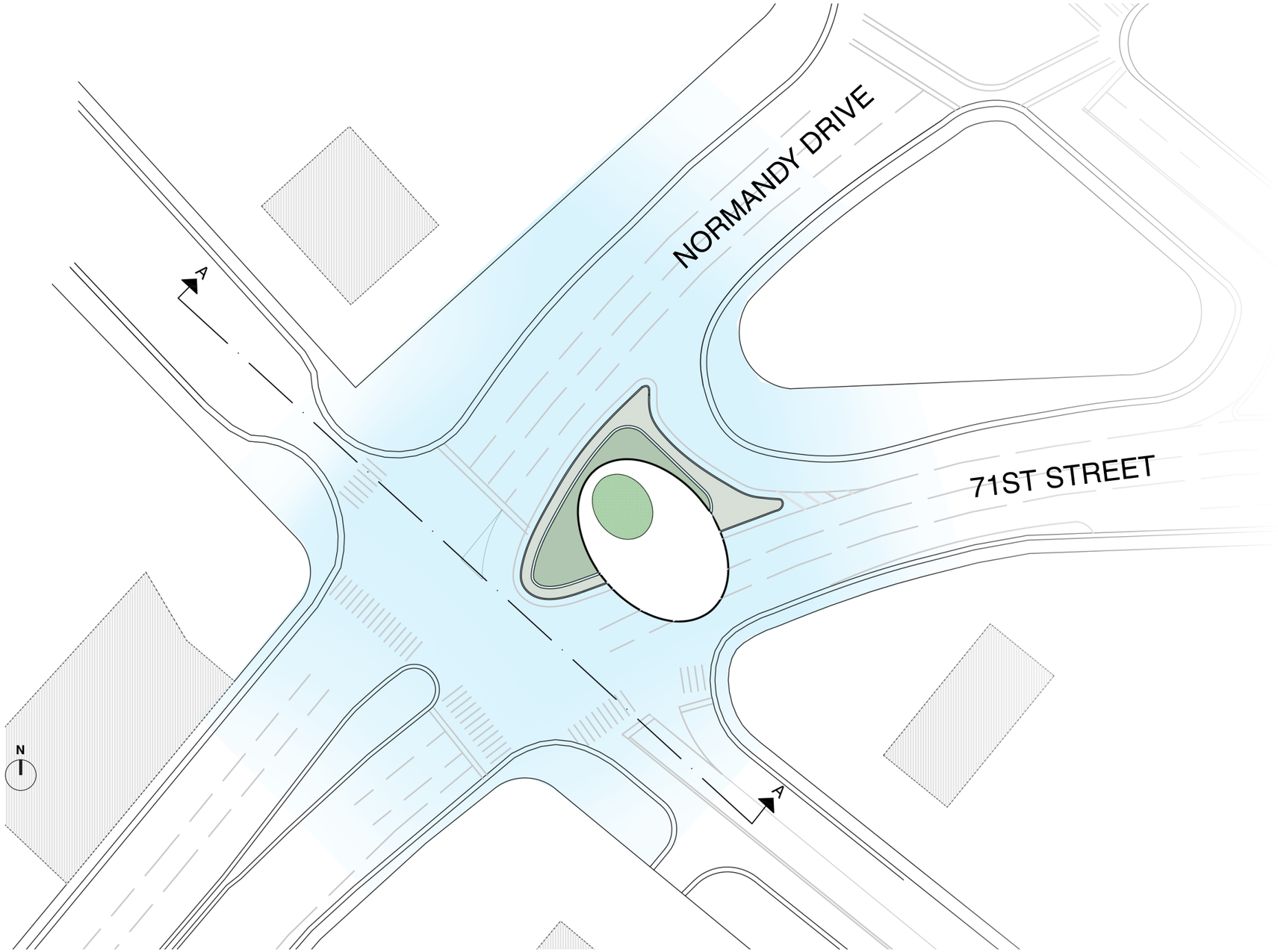

©2015 Shulman + Associates

OPTION 1 - PERSPECTIVES

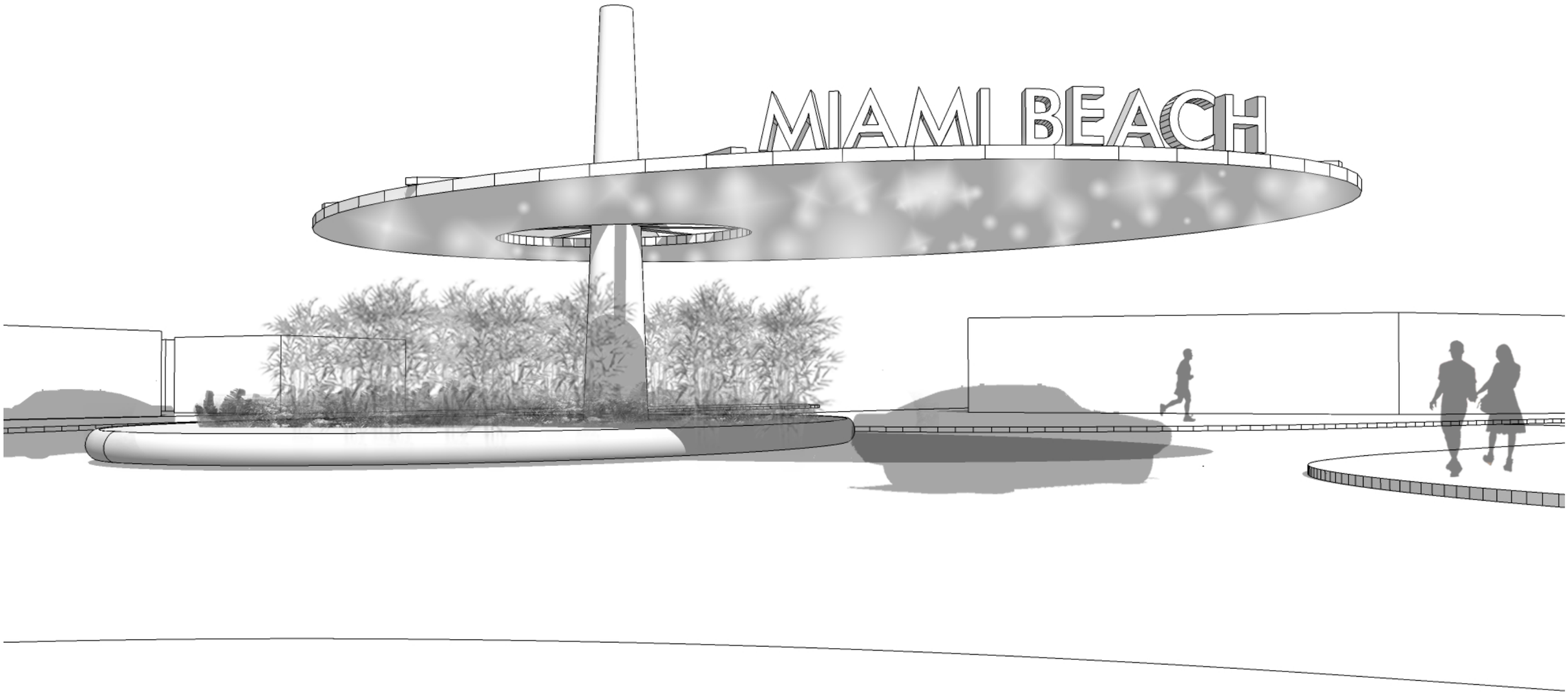

©2015 Shulman + Associates

OPTION 1 - PERSPECTIVES

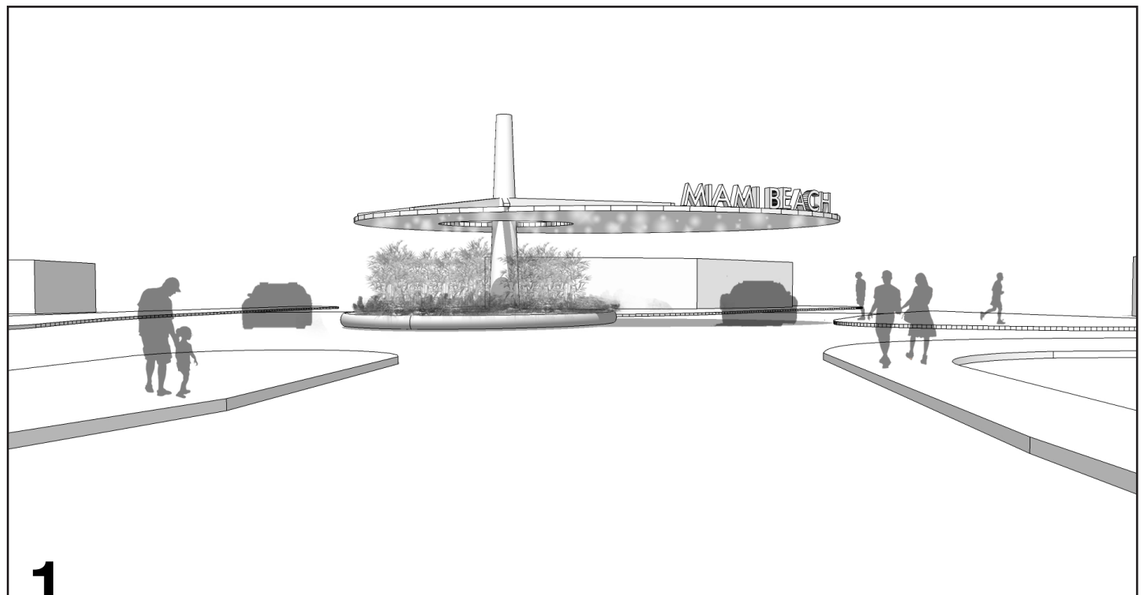

1

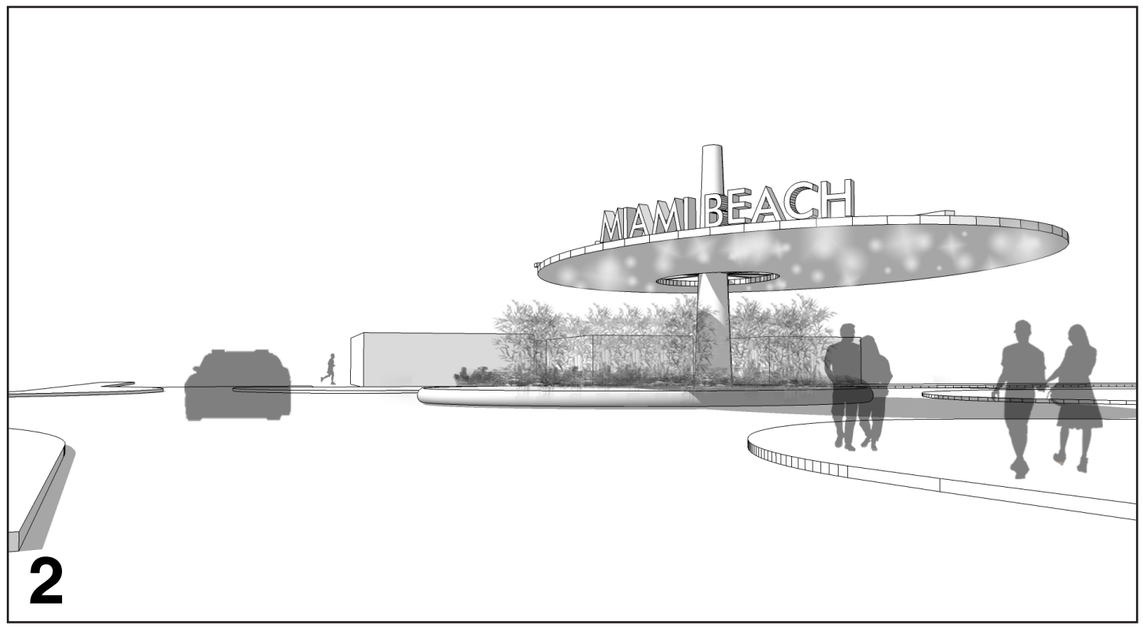

2

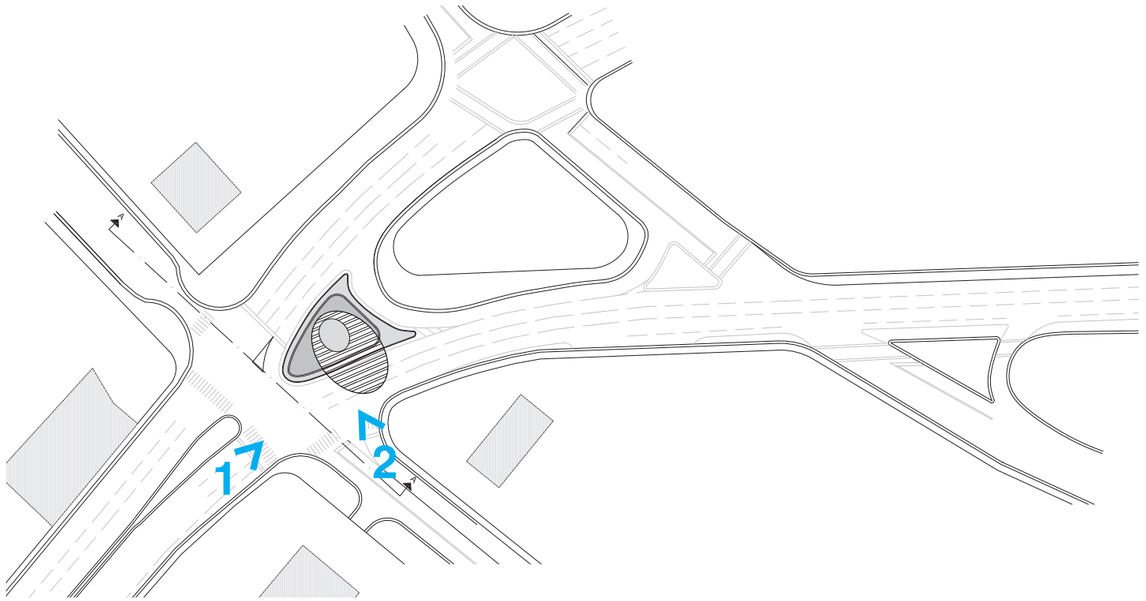

©2015 Shulman + Associates

OPTION 1 - DIMENSIONS

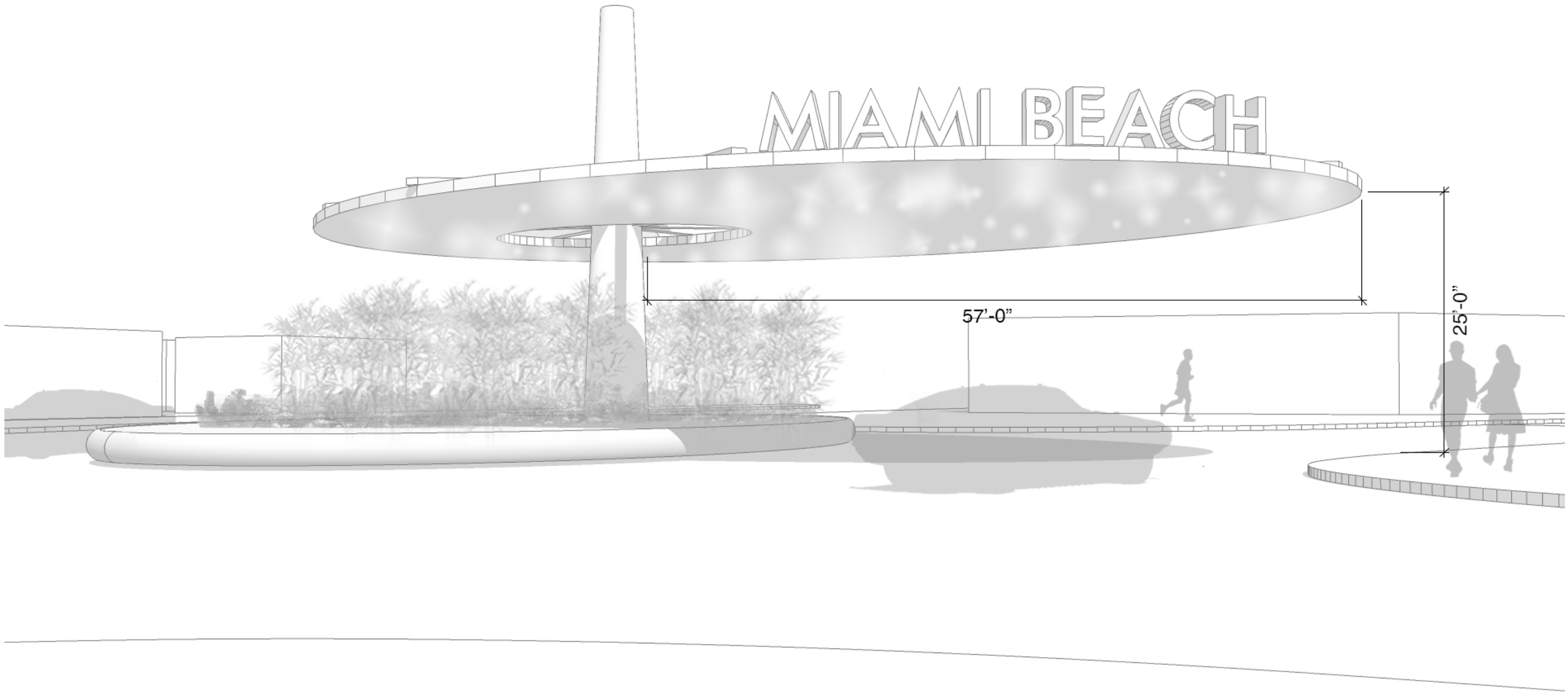

©2015 Shulman + Associates

OPTION 1 - DIMENSIONS

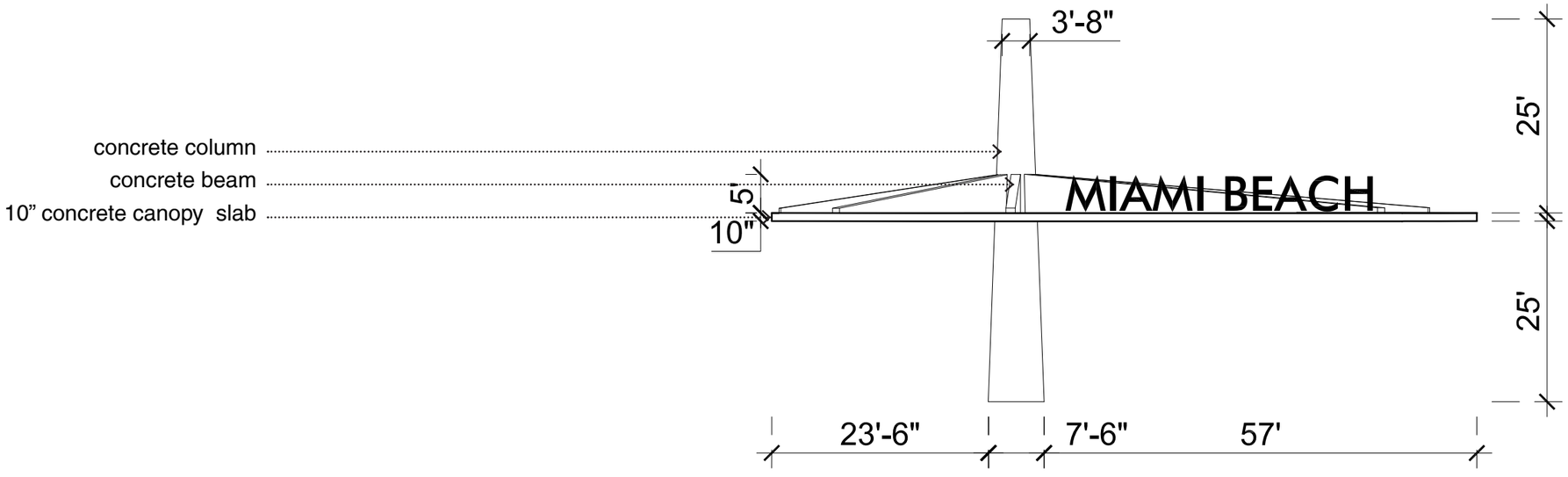

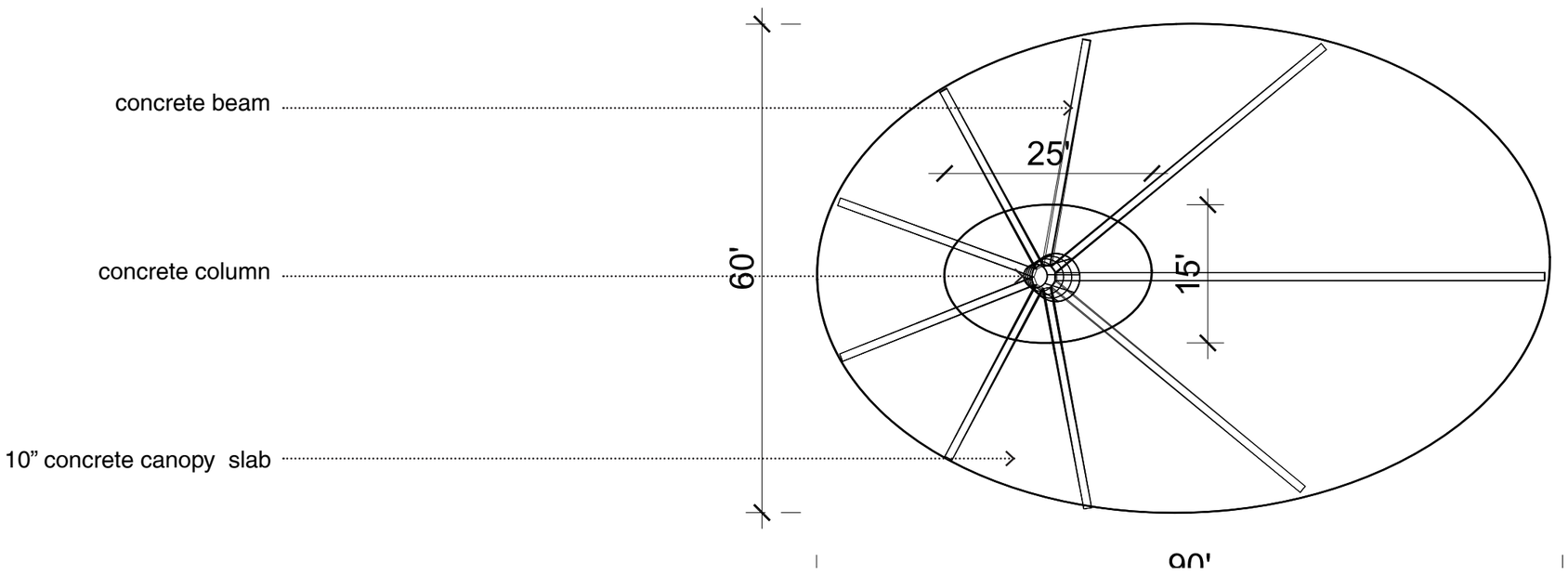

©2015 Shulman + Associates

OPTION 2 - PERSPECTIVES

©2015 Shulman + Associates

OPTION 2 - PERSPECTIVES

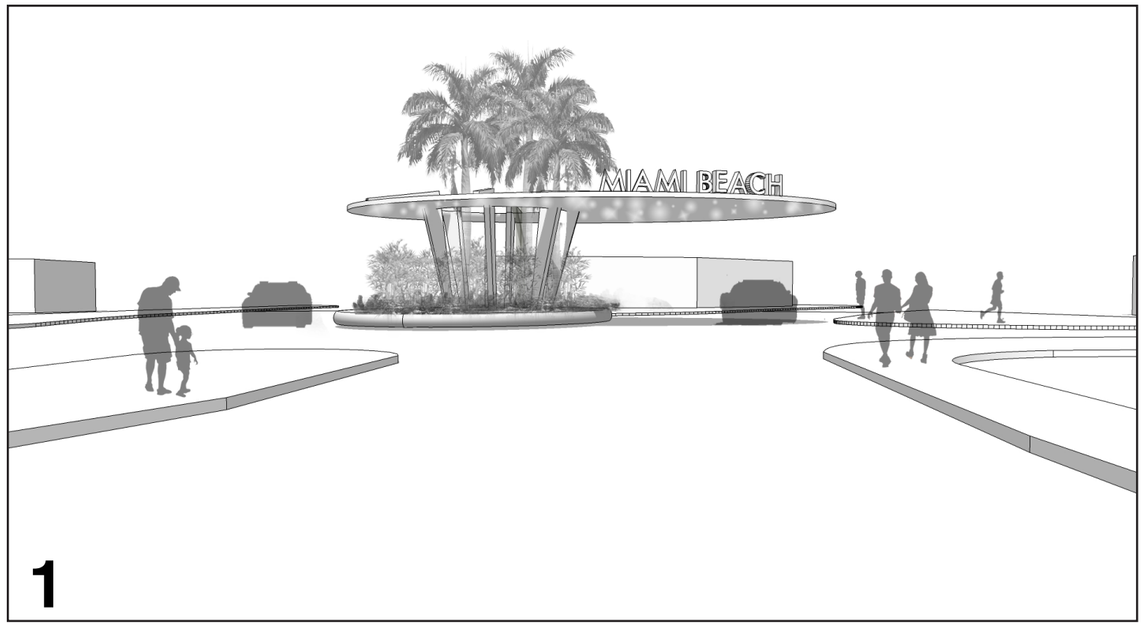

1

2

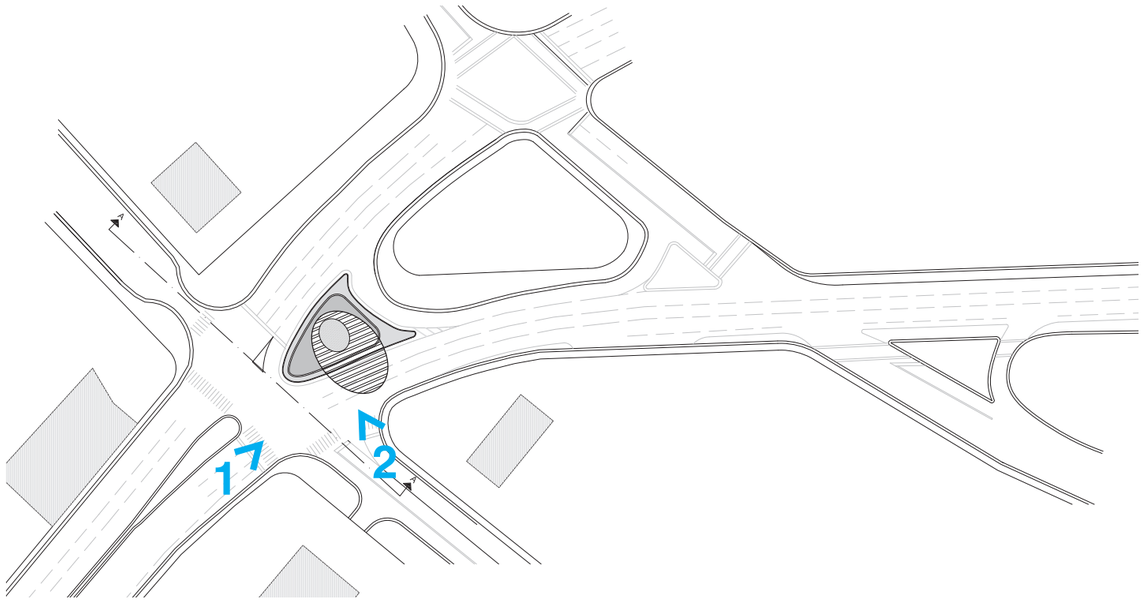

©2015 Shulman + Associates

OPTION 2 - DIMENSIONS

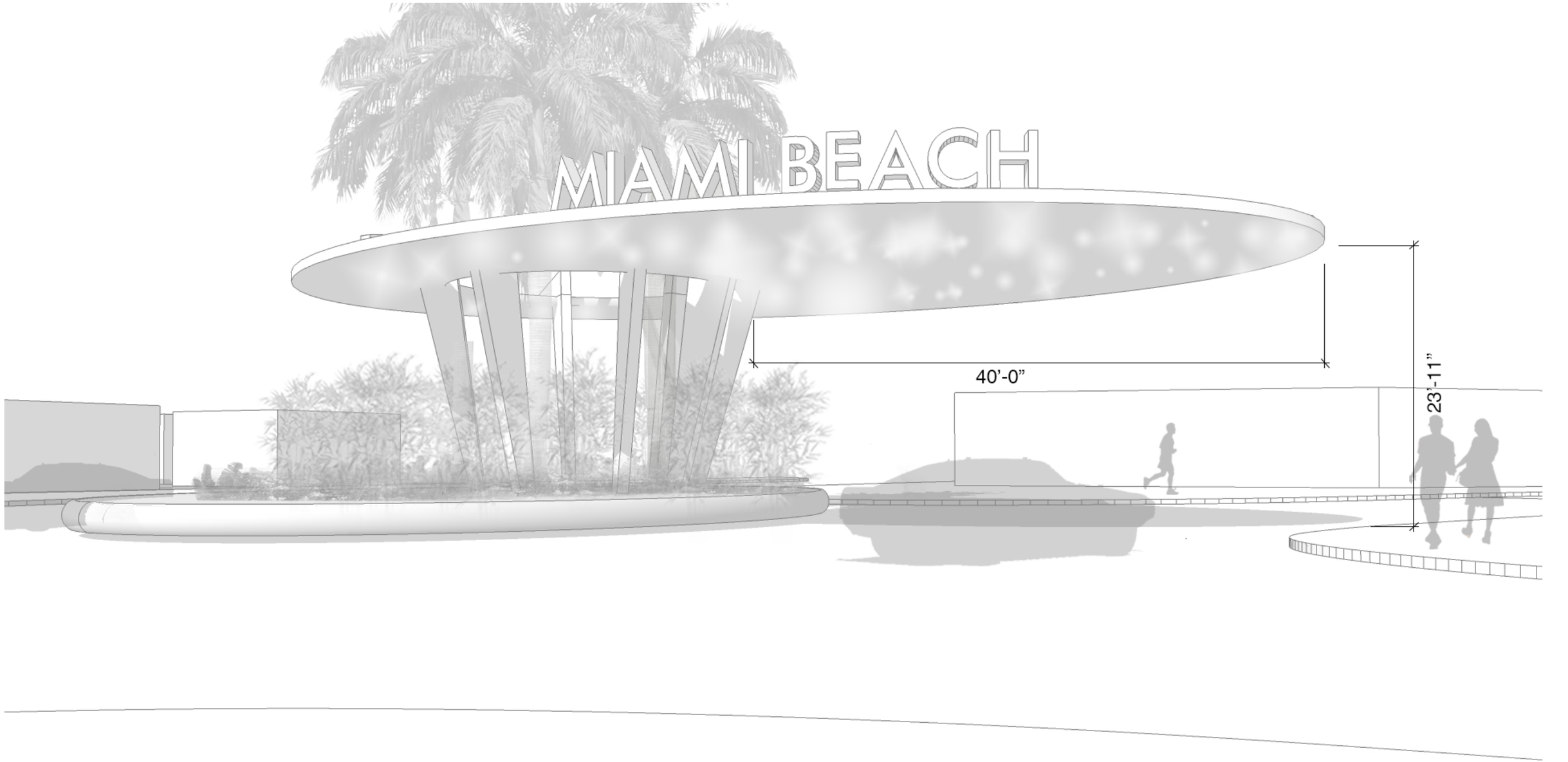

©2015 Shulman + Associates

OPTION 2 - DIMENSIONS

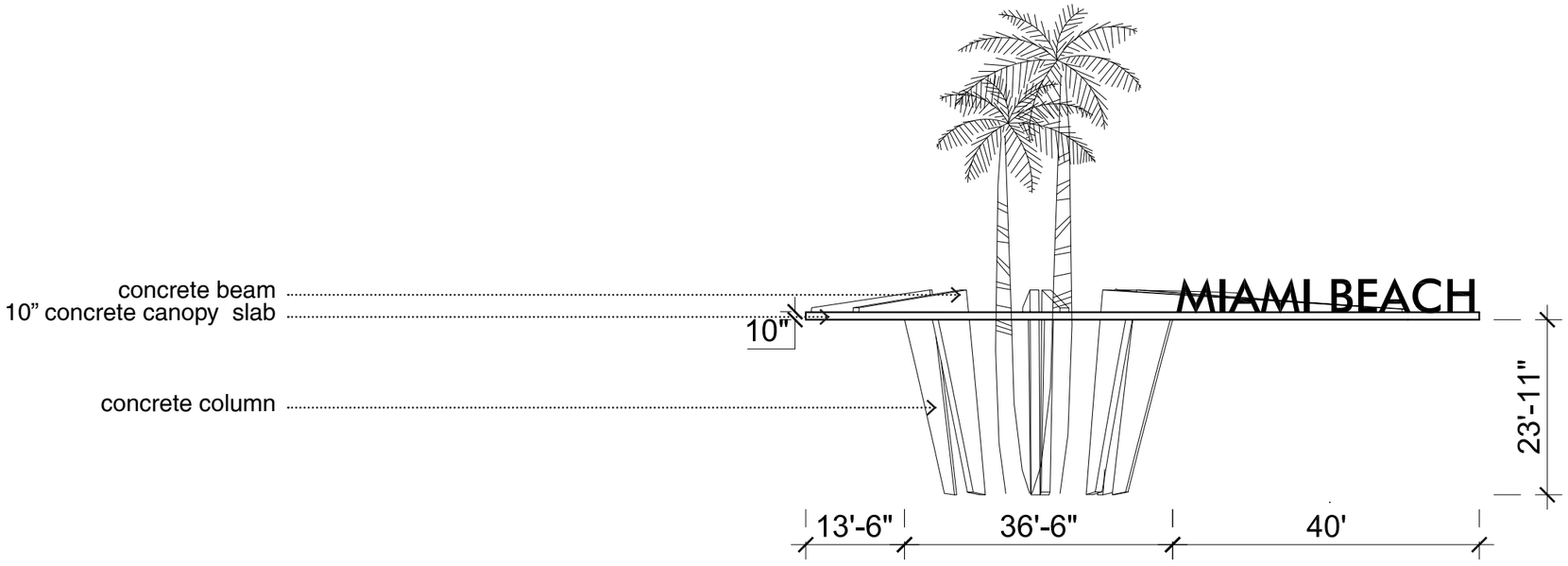

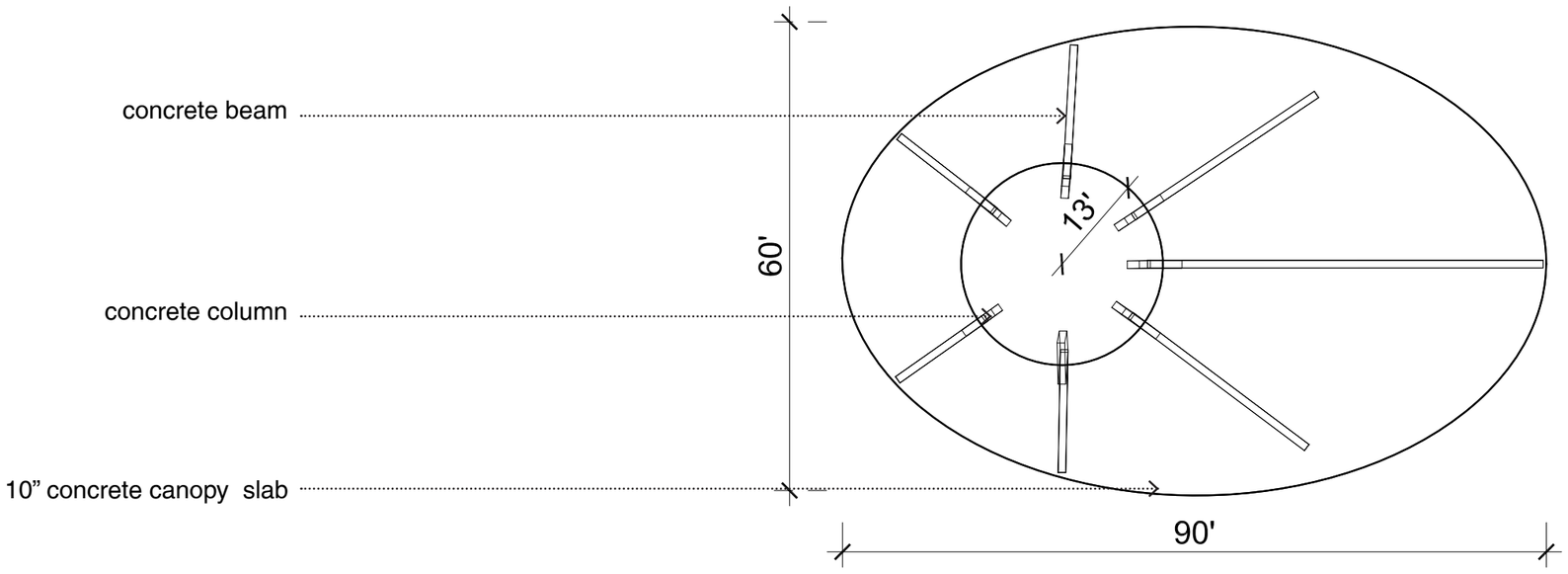

©2015 Shulman + Associates

OPTION 3 - PERSPECTIVES

©2015 Shulman + Associates

OPTION 3 - PERSPECTIVES

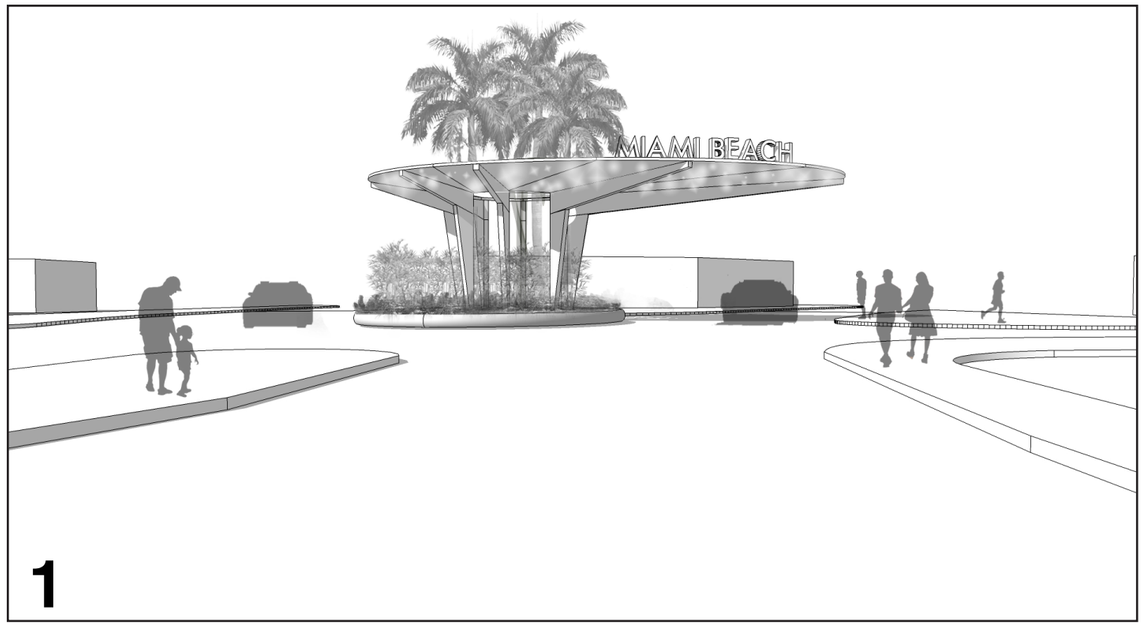

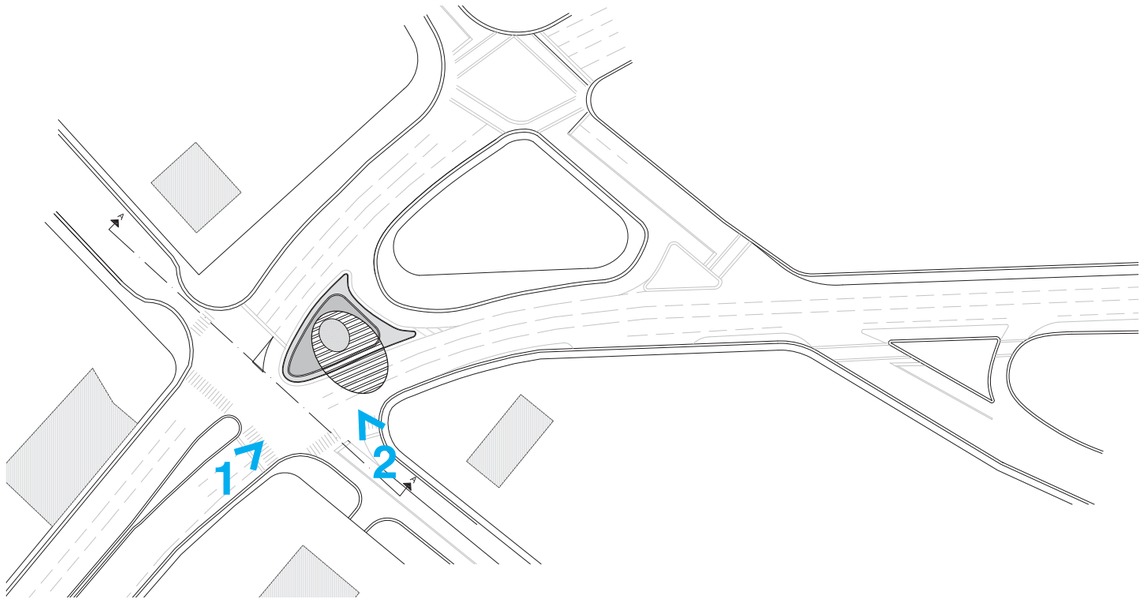

©2015 Shulman + Associates

OPTION 3 - DIMENSIONS

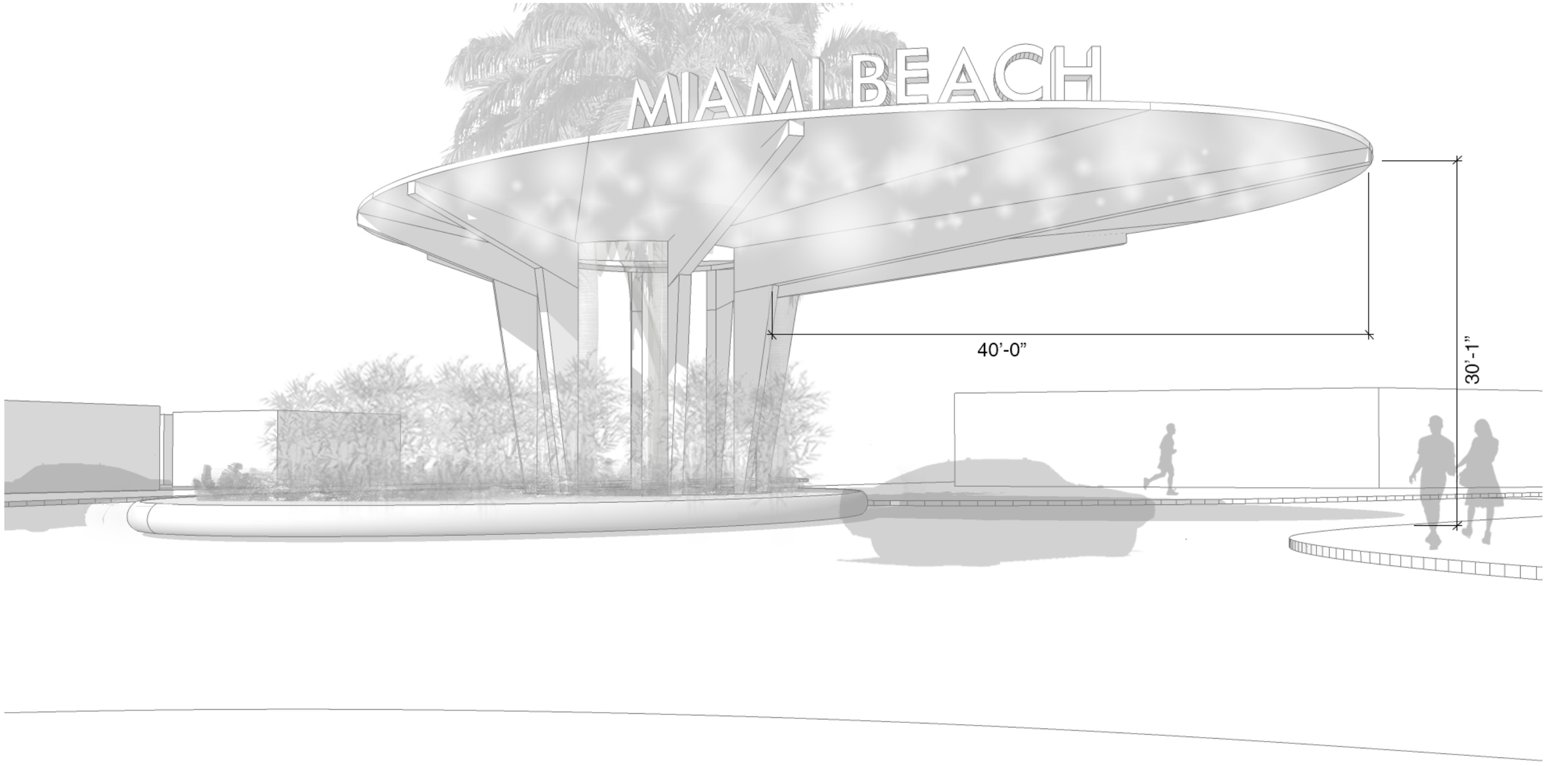

OPTION 3 - DIMENSIONS

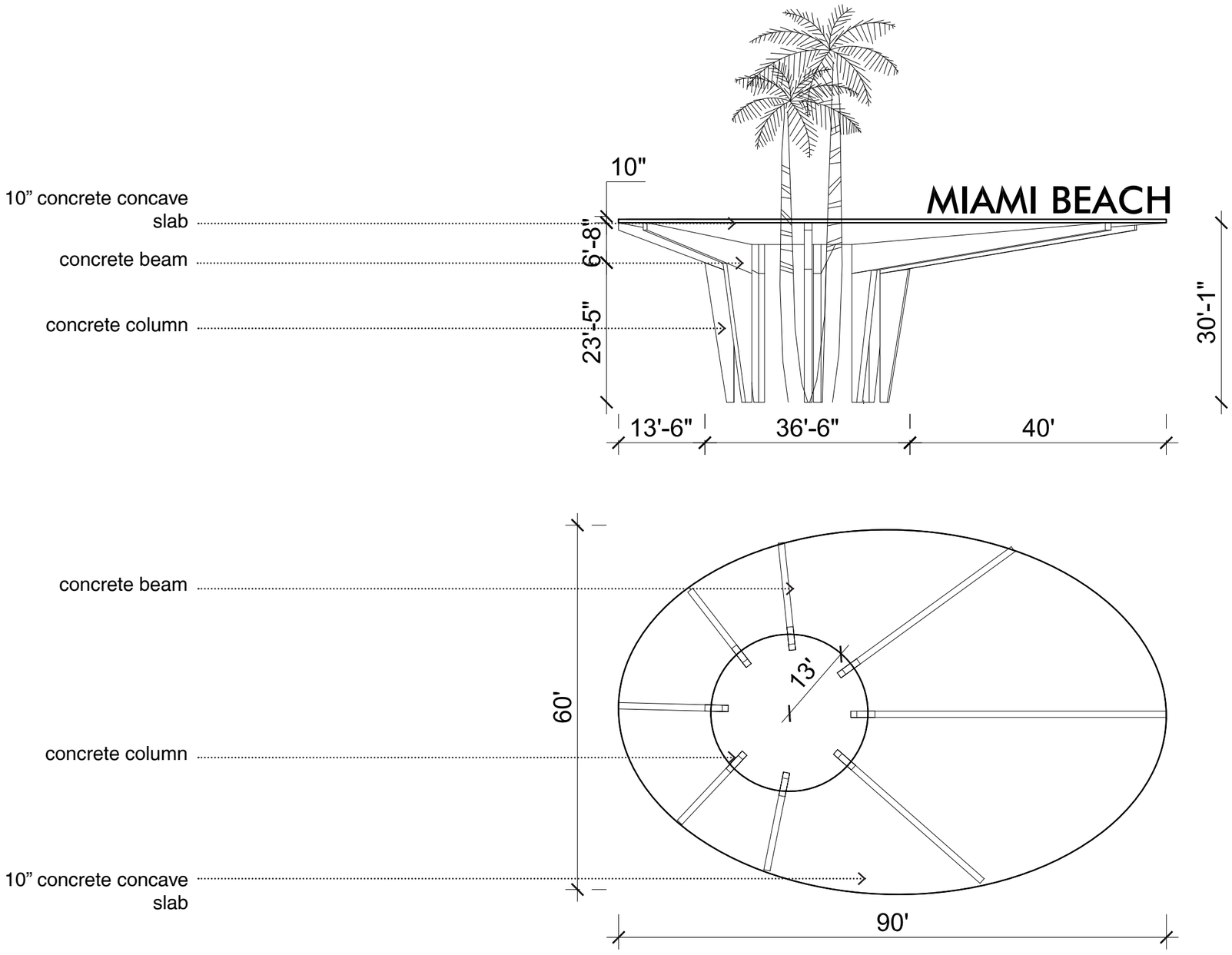

©2015 Shulman + Associates

OPTION 4 - PERSPECTIVES

©2015 Shulman + Associates

OPTION 4 - PERSPECTIVES

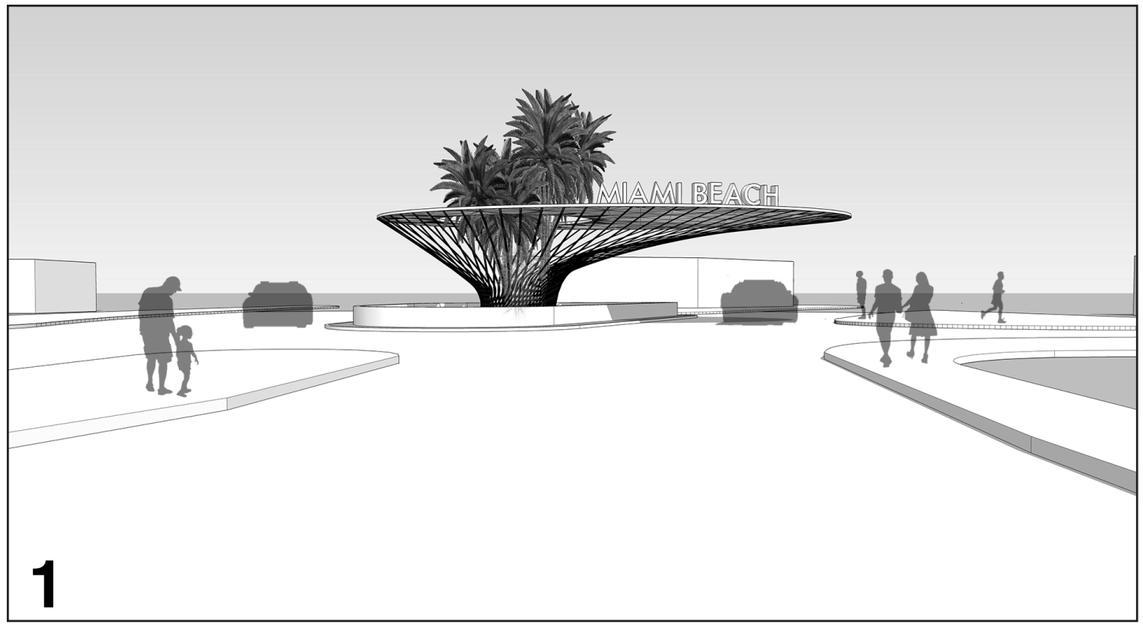

1

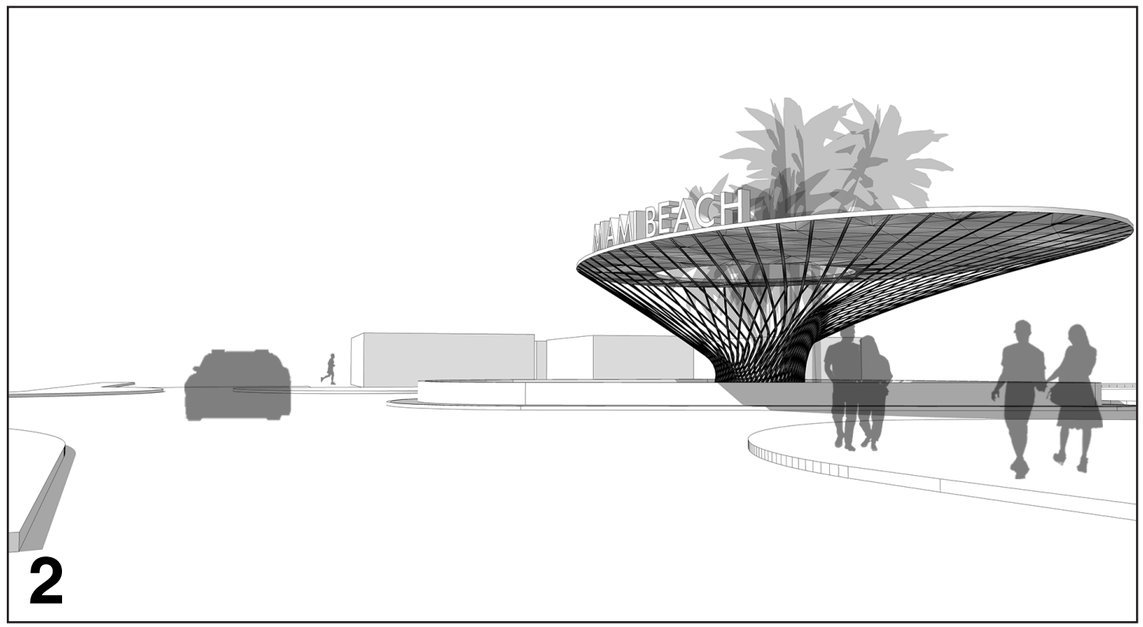

2

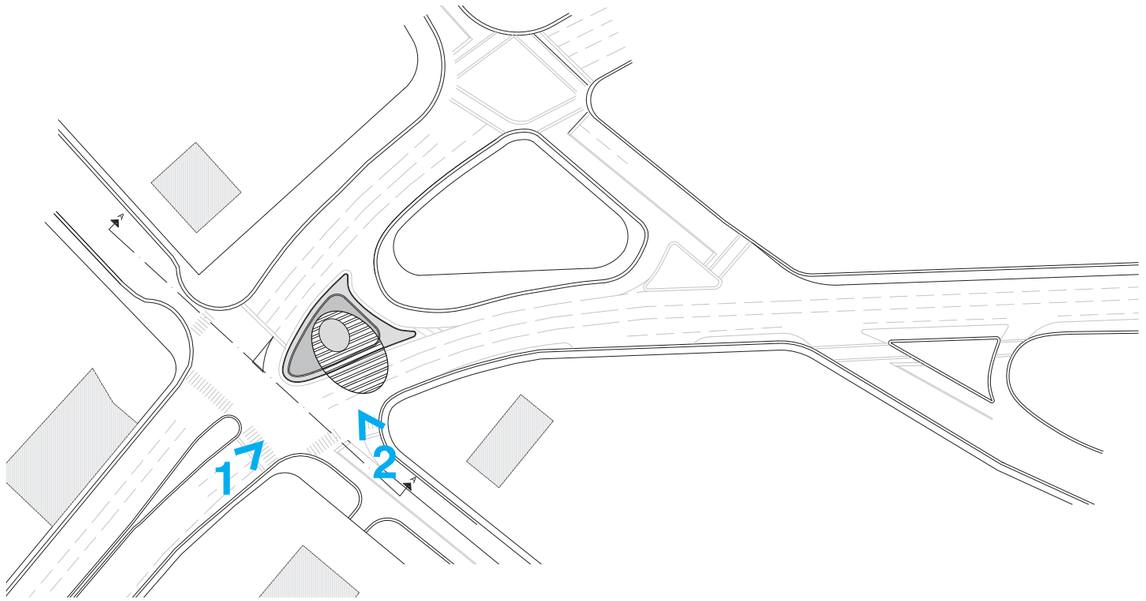

©2015 Shulman + Associates

OPTION 4 - DIMENSIONS

©2015 Shulman + Associates

OPTION 4 - DIMENSIONS

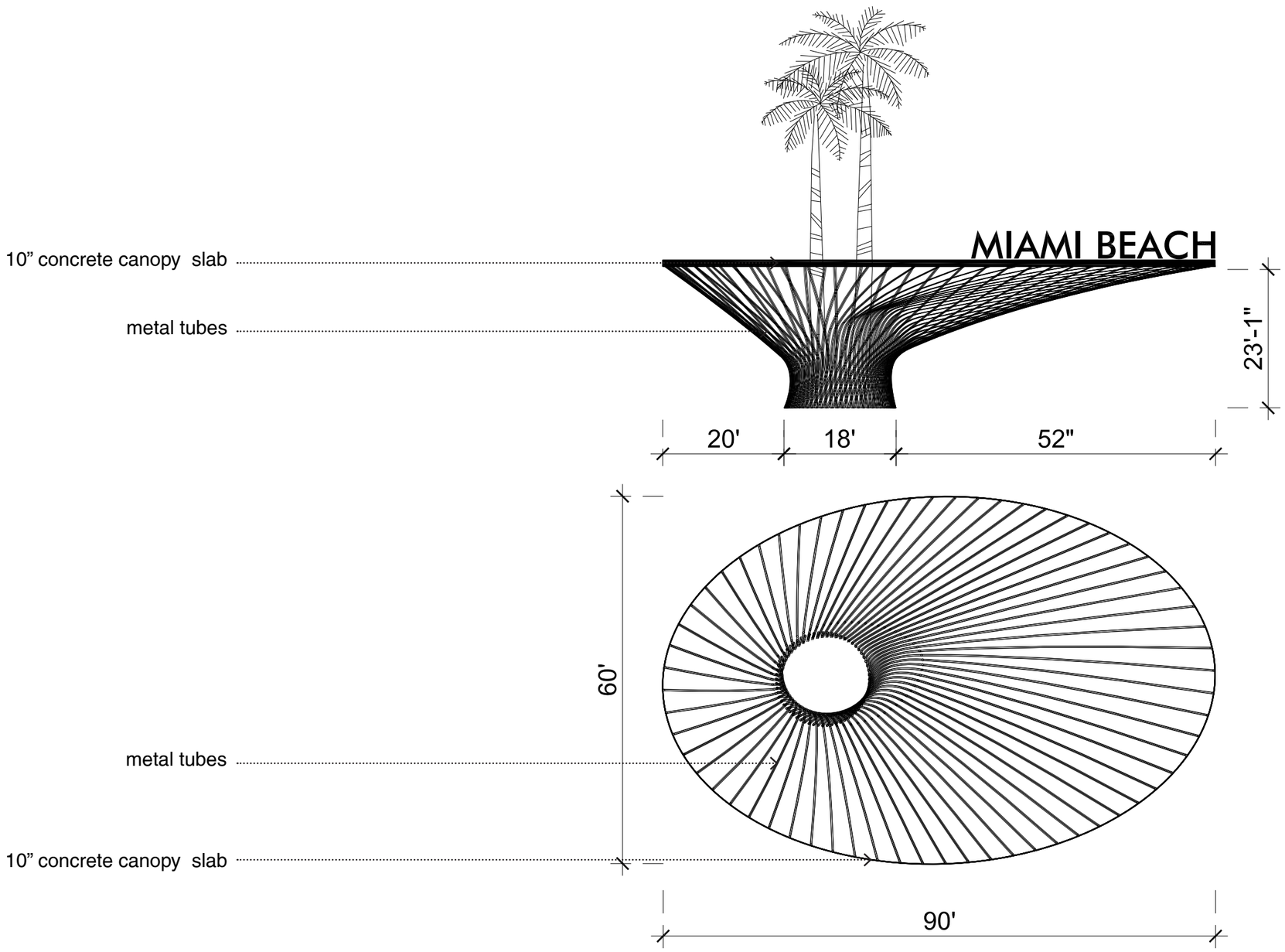

©2015 Shulman + Associates

OPTION 5 - PERSPECTIVES

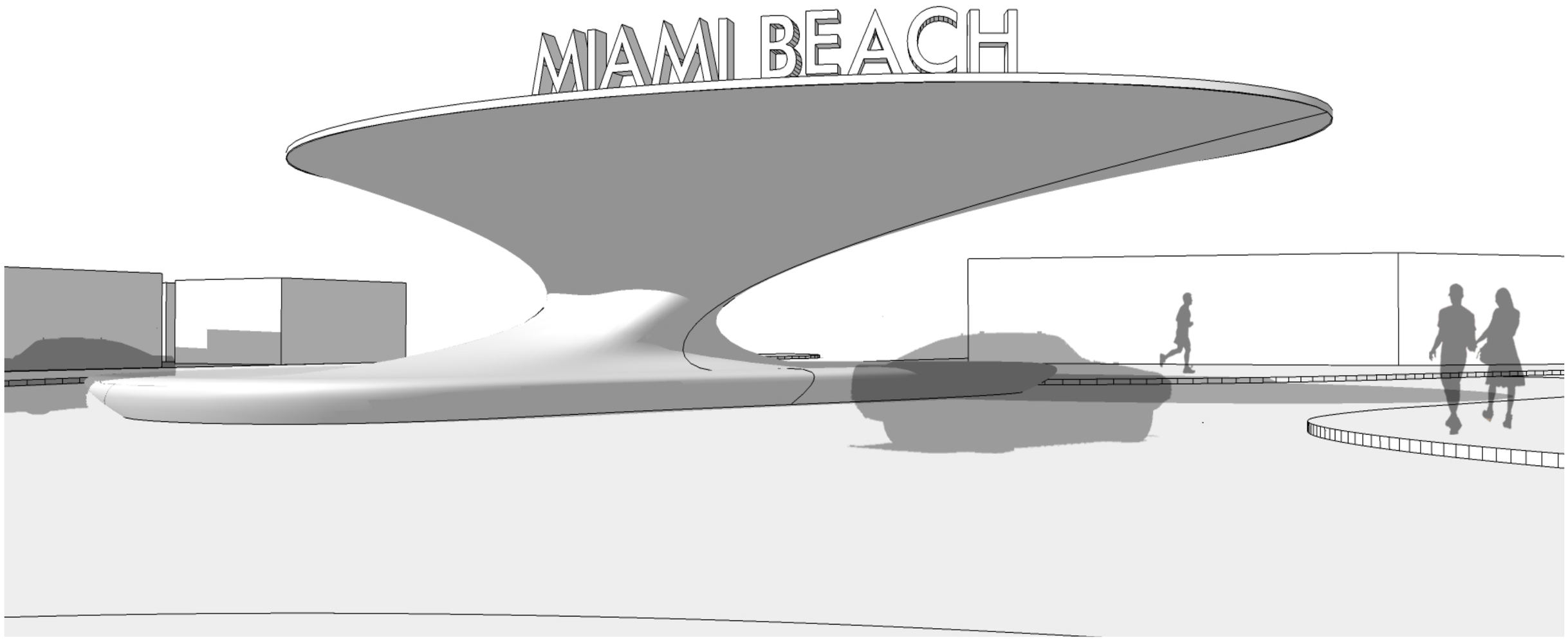

©2015 Shulman + Associates

OPTION 5 - PERSPECTIVES

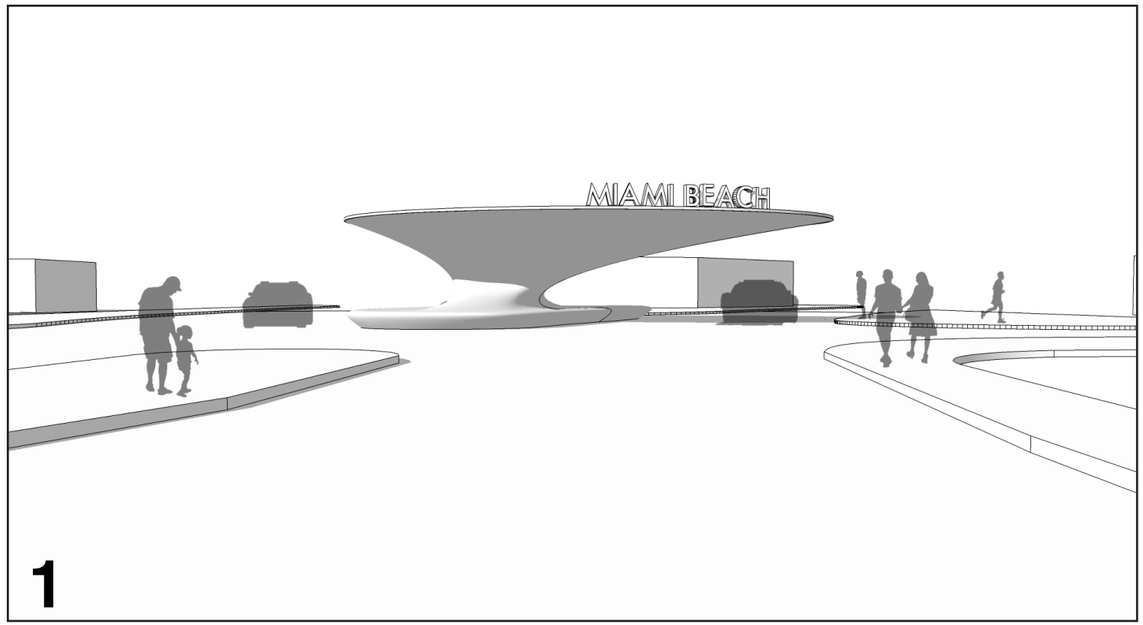

1

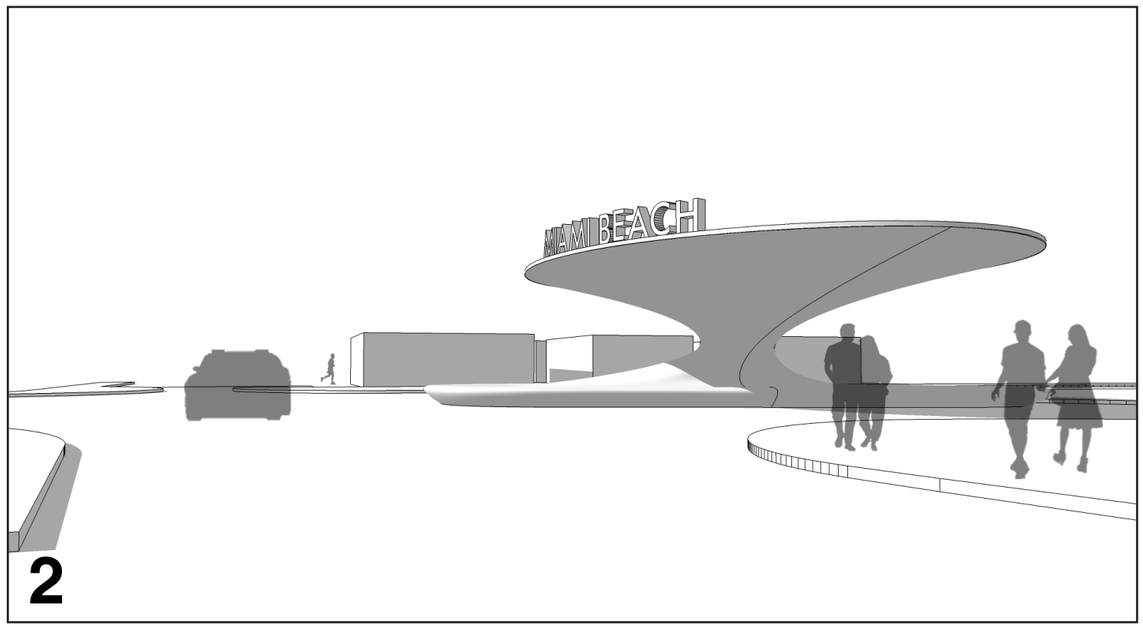

2

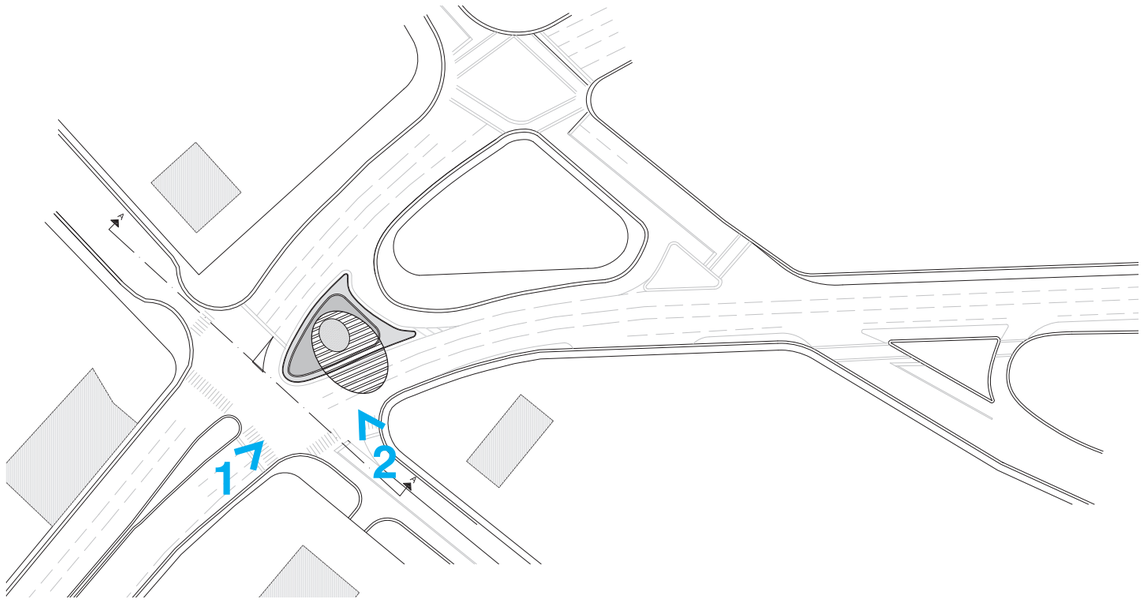

©2015 Shulman + Associates

OPTION 5 - DIMENSIONS

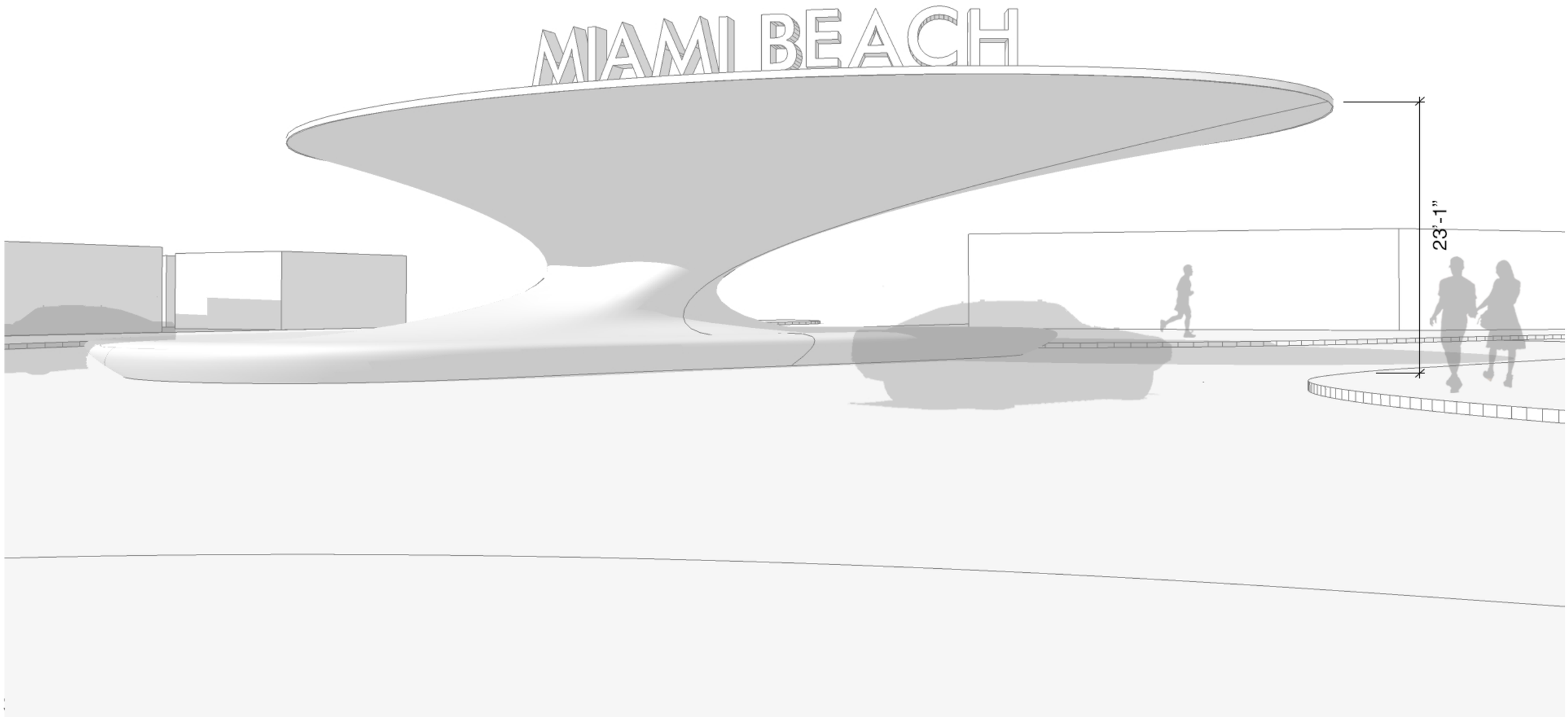

OPTION 5 - DIMENSIONS

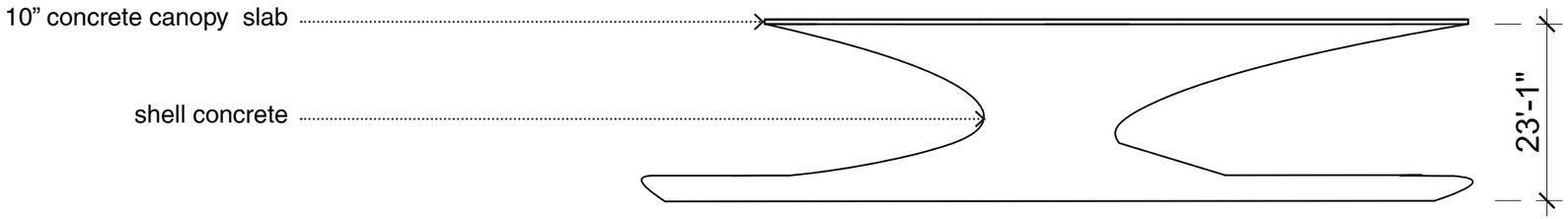

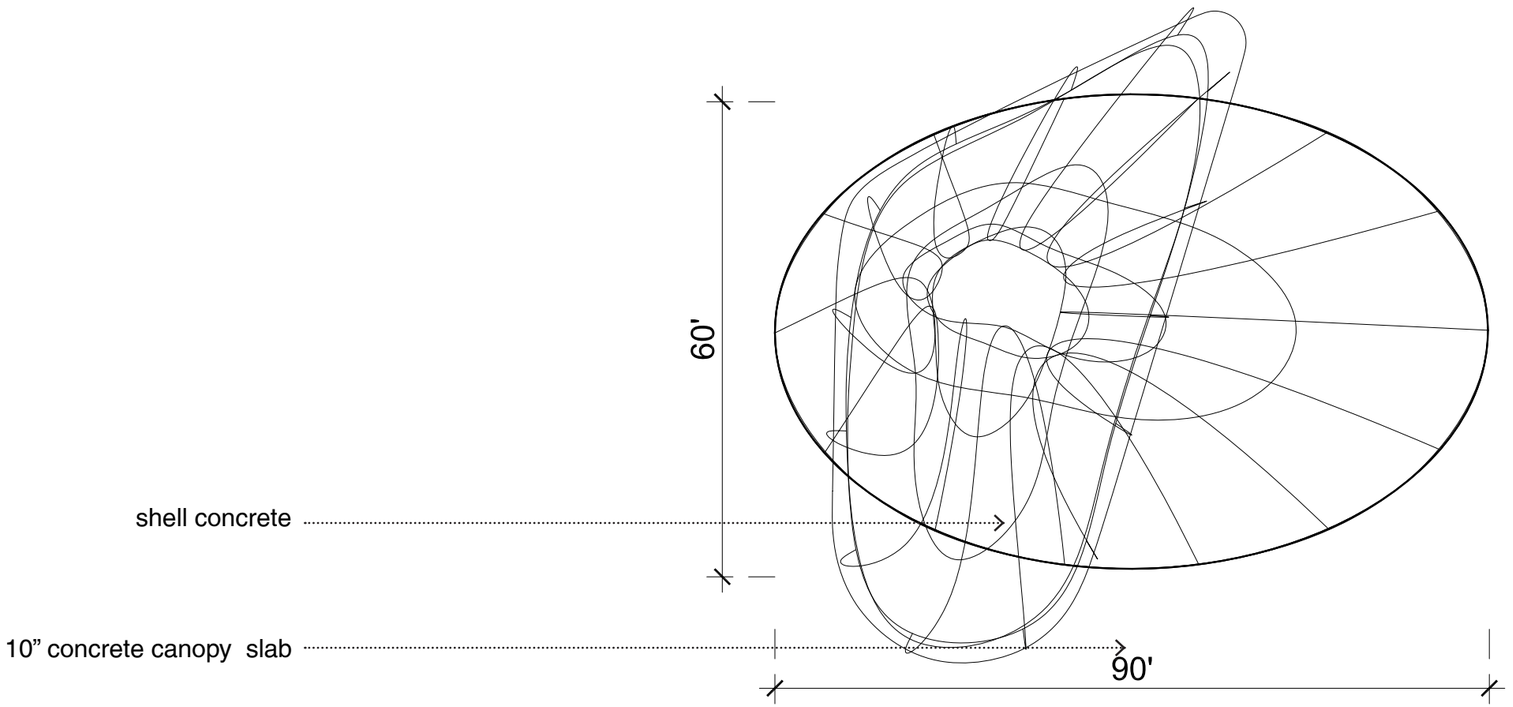

©2015 Shulman + Associates

Shulman + Associates